Town of Jackson
Utility
Standards

2008

NOTES

1. THESE STANDARDS ARE INTENDED TO SUPPLEMENT, AUGMENT AND COMPLEMENT THE LATEST EDITION TO THE WYOMING PUBLIC WORKS STANDARD SPECIFICATIONS (WPWSS). SHOULD A CONFLICT ARISE BETWEEN THESE STANDARDS AND THE WPWSS, THESE STANDARDS SHALL TAKE PRECEDENCE.

2. THESE STANDARDS MAY BE MODIFIED TO ADDRESS SPECIFIC PROJECT CIRCUMSTANCES, SUBJECT TO PRIOR REVIEW AND APPROVAL BY THE TOWN ENGINEER.

3. A PERMANENT CHANGE TO THESE STANDARDS, INCLUDING THE ADDITION OF NEW STANDARDS OR DELETION OF SUPERCEDED STANDARDS, REQUIRES APPROVAL (BY ADOPTION OF A RESOLUTION) BY THE TOWN COUNCIL.

These Standards shall apply to all improvements within the public right-of-way and/or public easements, to all improvements required within the proposed public right-of-way of new subdivisions, improvements which connect to and may affect the Town's utilities, for all improvements intended for ownership, operation and maintenance by the Town and for all other improvements (on or offsite) for which the Town Code requires approval from the Town Engineer and/or the Town Council.

These Standards are intended as guidelines for designers and developers in preparing their plans for Town review and approval. The developer/proponent is however cautioned that higher standards and/or additional studies and/or environmental mitigation measures shall be imposed by the Town should same be warranted.

Alternate design standards will be accepted when it can be shown, to the satisfaction of the Town, that such alternate standards will provide a design equal to or superior to that specified. In evaluating the alternate design, the Town shall consider appearance, traffic operations, durability, ease of maintenance, public safety and other appropriate factors.

Any improvements not specifically covered herein by these Standards must meet or exceed the Wyoming Public Works Standards Specifications. Said specifications shall be referred to hereafter as the "Standard Specifications".

The extension of public utilities, from the limits of the Town's system to a development, shall be completed to facilitate the future extension of Town infrastructure beyond the development. As such, when required by the Town Engineer, the developing property shall be required to extend the utilities to its "far" property limits. Based on the impacts created by the development, the proponent shall be required to analyze offsite facilities. When appropriate, the proponent shall provide mitigation and/or pay a fair share fee to the Town to minimize the impacts to the existing infrastructure. This analysis shall include but not be limited to: roadway capacity, infrastructure, water systems, sewer systems, and storm drainage utilities. At no time shall a development be created which reduces the existing town systems to less than acceptable standards of service.

Where improvements are not covered by these Standards or by the Standard Specifications or by the standard details, the Town shall be the sole judge in establishing appropriate standards. Where these Standards conflict with any existing Town ordinances or discrepancies exist within the body of this text, the higher standards shall be utilized as determined by the Town Engineer.

Plans for major improvements in the public right-of-way or within public easements, improvements connected to the Town's utility system, or improvements to be dedicated to the Town, shall bear an approval signature from the Town.

The designer shall submit drawings, calculations or other appropriate materials supporting the design of utilities, pavements and storm drainage facilities. The designer shall submit calculations for structures and other designs when requested by the Town Engineer and/or Building Official. All designs required for the infrastructure shall be stamped by a currently licensed State of Wyoming civil engineer.

Street Details

2008

ST-100….Clear Vision Triangle

ST-101….Street Intersection

ST-102….Street Striping

ST-103….Designated On –Street Bicycle Lane

ST-104….Street Sign Detail

ST-105….Sign Placement

ST-106….Street Light XXX

ST-107….Street Light XXX

ST-108….Street Light Base

ST-109….Valley Gutter and Curb Turn Fillet

ST-110….Curb Sections

ST-111….Boardwalk

ST-112….Pedestrian Ramps

ST-113….Driveway Curb Cut

ST-114….Bus Turnout

ST-115….Cul-De-Sac

ST-116….Hammerhead Turnaround

ST-117….Trench Restoration Detail

ST-118….Asphalt & Concrete Patch Repair Cross Sections

ST-119….Stabilized Construction Entrance

ST-120….Public Alley Sections

ST-121….Beam Guardrail (W-Beam) Details

ST-122….Beam Guardrail Post & Block Details

ST-123….Paving & Concrete Joint Details

ST-124….Paving & Unit Paver Installation Details

ST-125….Concrete Band Paving Details

ST-126….Type X Curb

ST-127….Concrete Sidewalk

ST-128….Sidewalk Corridor

ST-129….Temporary Construction Sidewalk

ST-130….Canopies Into the Public Right-of-Way

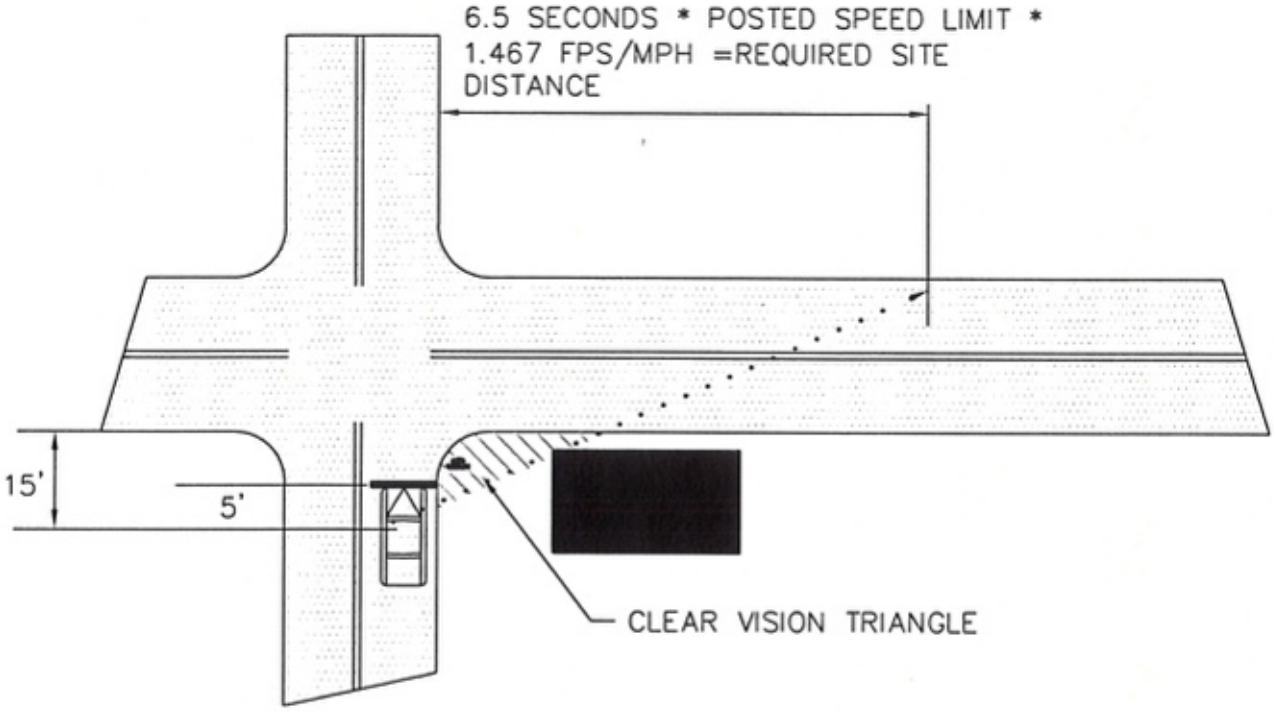

NOTES:

1. THERE SHALL BE NO FENCE, WALL, ENTRANCE, HEDGE, SHRUB PLANTING, TREE, OR OTHER SIGHT OBSTRUCTION ABOVE TWO AND ONE-HALF (2.5) FEET ABOVE THE PAVEMENT ELEVATION LOCATED WITHIN THE CLEAR VISION TRIANGLE.

TOWN OF JACKSON WYOMING	*CLEAR VISION TRIANGLE*	ST-100 DATE: *1/17/07*
		SCALE: *NTS*

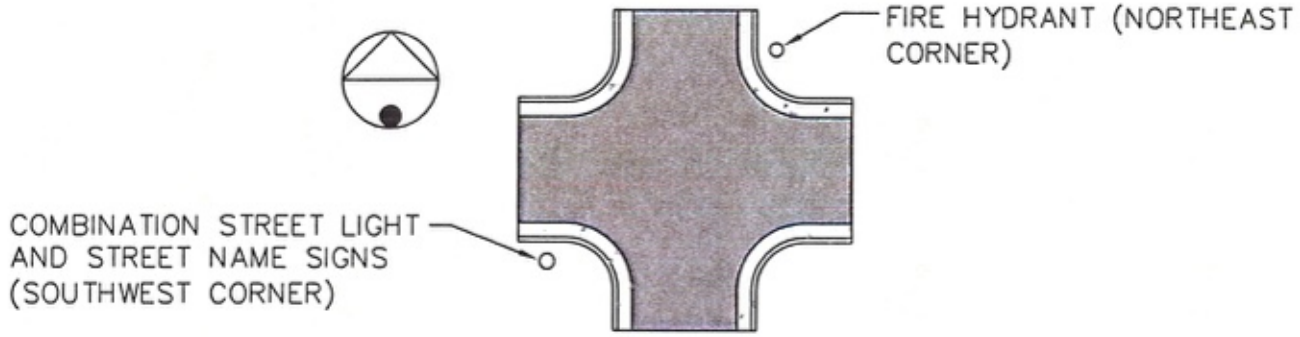

PREFERRED INFRASTRUCTURE LOCATIONS

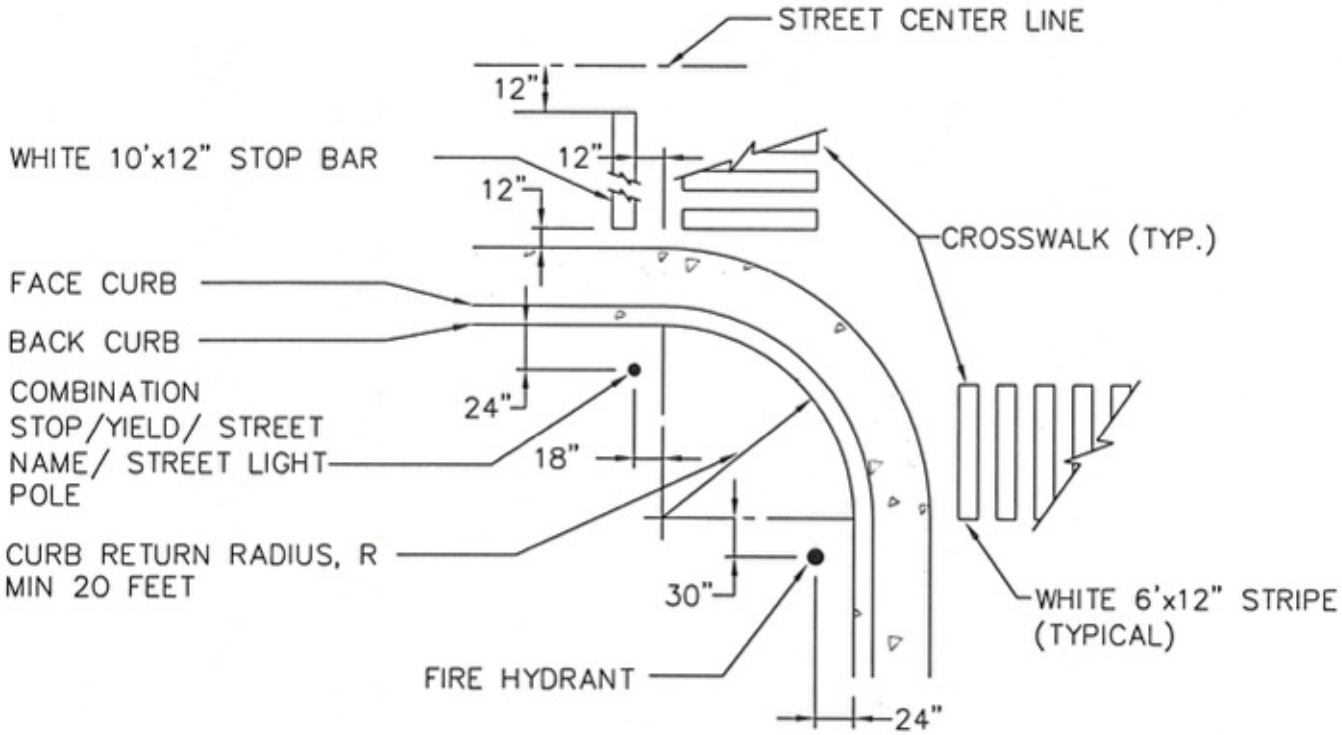

CURB RETURN PLAN DETAIL

NOTES:

1. PEDESTRIAN RAMPS SHALL BE PER TOWN STANDARDS AND CONFORM TO ALL ADA STANDARD REQUIREMENTS.
2. SIGNAGE PLACEMENT SHALL BE PER THIS DRAWING.
3. STREET LIGHTS SHALL BE PER TOWN STANDARDS.
4. CURB RETURN RADIUS (AT THE BACK OF CURB) SHALL BE 10' FOR ALL STREET DESIGNATIONS EXCEPT INDUSTRIAL, WHERE R SHALL EQUAL 30'.
5. CLEAR THROUGH ZONE MUST BE MAINTAINED AROUND ALL OBSTRUCTIONS, INCLUDING FIRE HYDRANTS, UTILITY POLES, GUY WIRES, PULL BOXES, NEWSPAPER BOXES, PHONE BOOTHS, ETC.
6. STOP BARS SHALL BE PROVIDED ON ALL STOP SIGN OR TRAFFIC SIGNAL-CONTROLLED LEGS OF EVERY STREET INTERSECTION IN TOWN.
7. CROSSWALKS SHALL BE PROVIDED AT EVERY COLLECTOR/COLLECTOR, ARTERIAL/ARTERIAL, OR COLLECTOR/ARTERIAL STREET INTERSECTION IN TOWN.
8. FIRE HYDRANT SHALL BE PER TOWN STANDARDS.

TOWN OF JACKSON WYOMING	*STREET INTERSECTION*	ST-101 DATE: *1/17/07*
		SCALE: *NTS*

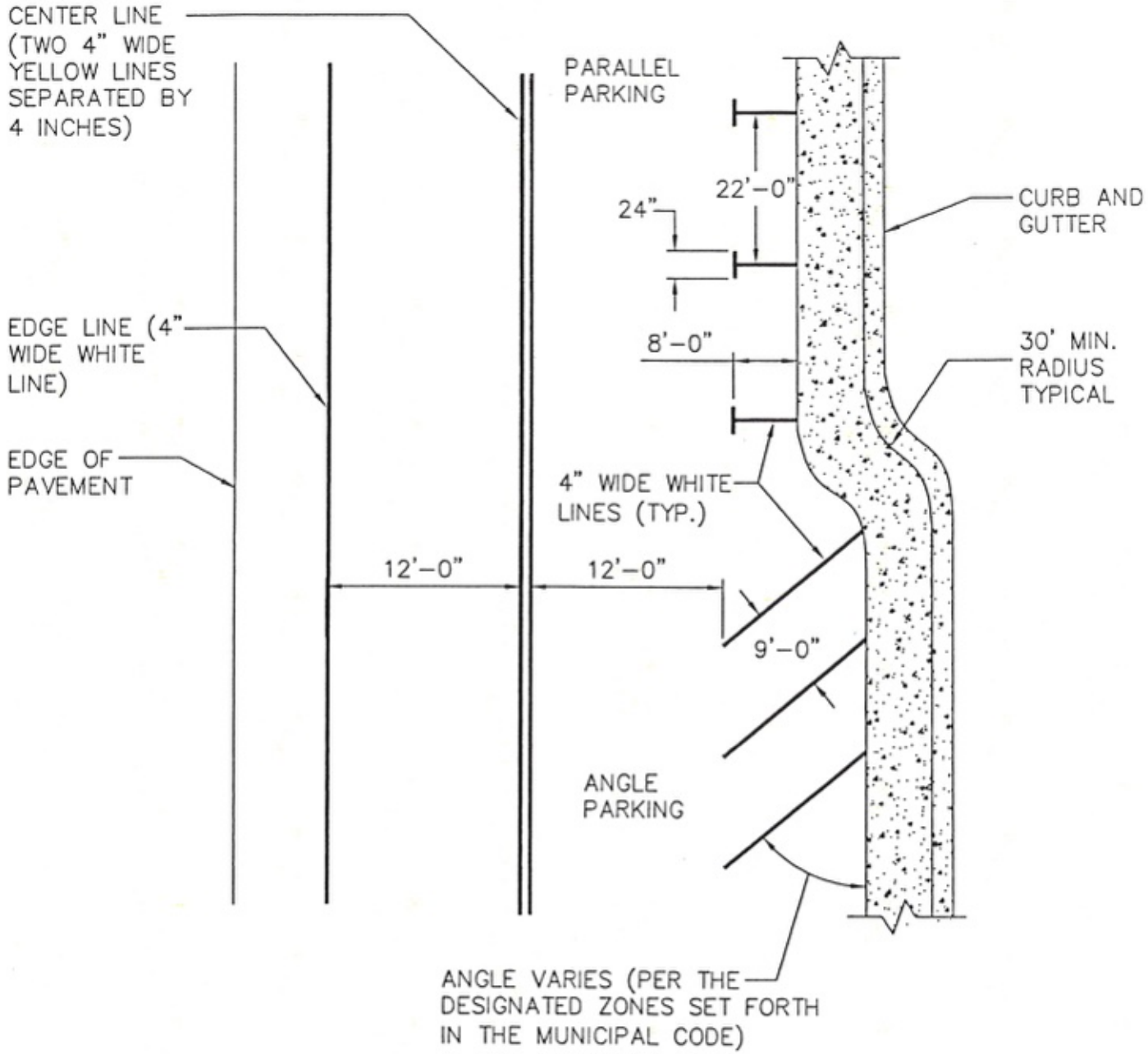

NOTES:

1. STREET STRIPING SHALL CONFORM TO ALL ADA STANDARD REQUIREMENT.
2. CENTERLINE STRIPING SHALL BE PROVIDED ON ALL ARTERIAL AND COLLECTOR STREETS.
3. PARKING SPACE STRIPING SHALL BE PROVIDED ON ALL STREETS WHERE TIME-RESTRICTED PARKING IS SET FORTH IN THE MUNICIPAL CODE.
4. EDGE LINE STRIPING SHALL BE PROVIDED ON ALL STREETS WHERE NO CURB SECTION (INCLUDING RIBBON CURB) EXIST.
5. STOP BARS AND INTERSECTION CROSS WALK STRIPING SHALL BE PER TOWN STANDARDS.

TOWN OF JACKSON WYOMING	*STREET STRIPING*	ST-102 DATE: *1/17/07*
		SCALE: *NTS*

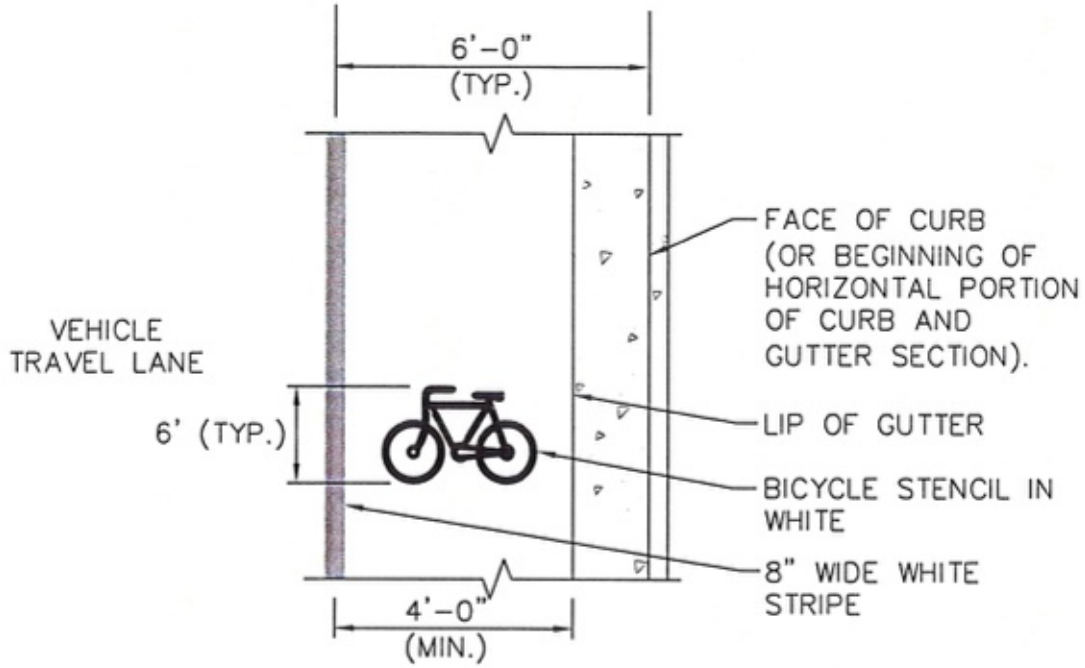

BICYCLE LANE WITH NO ON-STREET PARKING

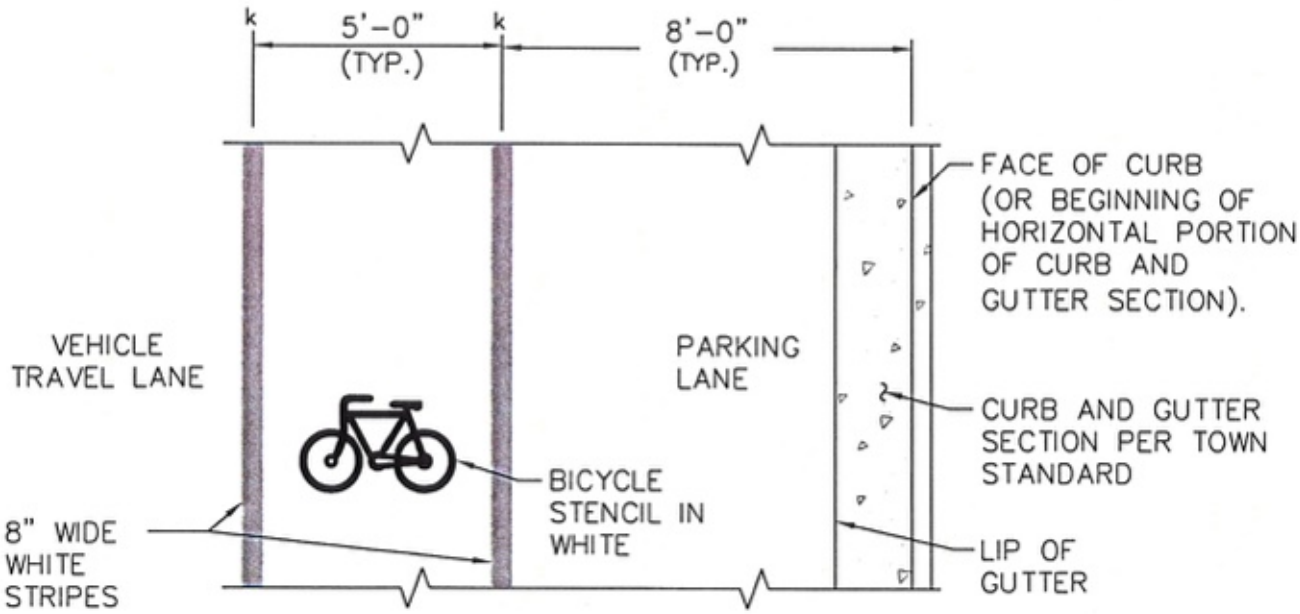

BICYCLE LANE WITH ON-STREET PARKING

NOTES:

1. BICYCLE STENCIL SHALL BE PLACED AFTER EACH INTERSECTION (IN THE DIRECTION OF TRAVEL) AND NO MORE THAN 500 FEET APART WHERE INTERSECTIONS ARE WIDELY SPACED.

2. SIGNAGE IDENTIFYING THE ON-STREET BICYCLE LANE SHALL BE INSTALLED IN CONJUNCTION WITH AND AT THE SAME FREQUENCY AS PAVEMENT MARKINGS.

DESIGNATED ON-STREET BICYCLE LANE	ST-103	DATE: *1/17/07*
	SCALE: *NTS*	

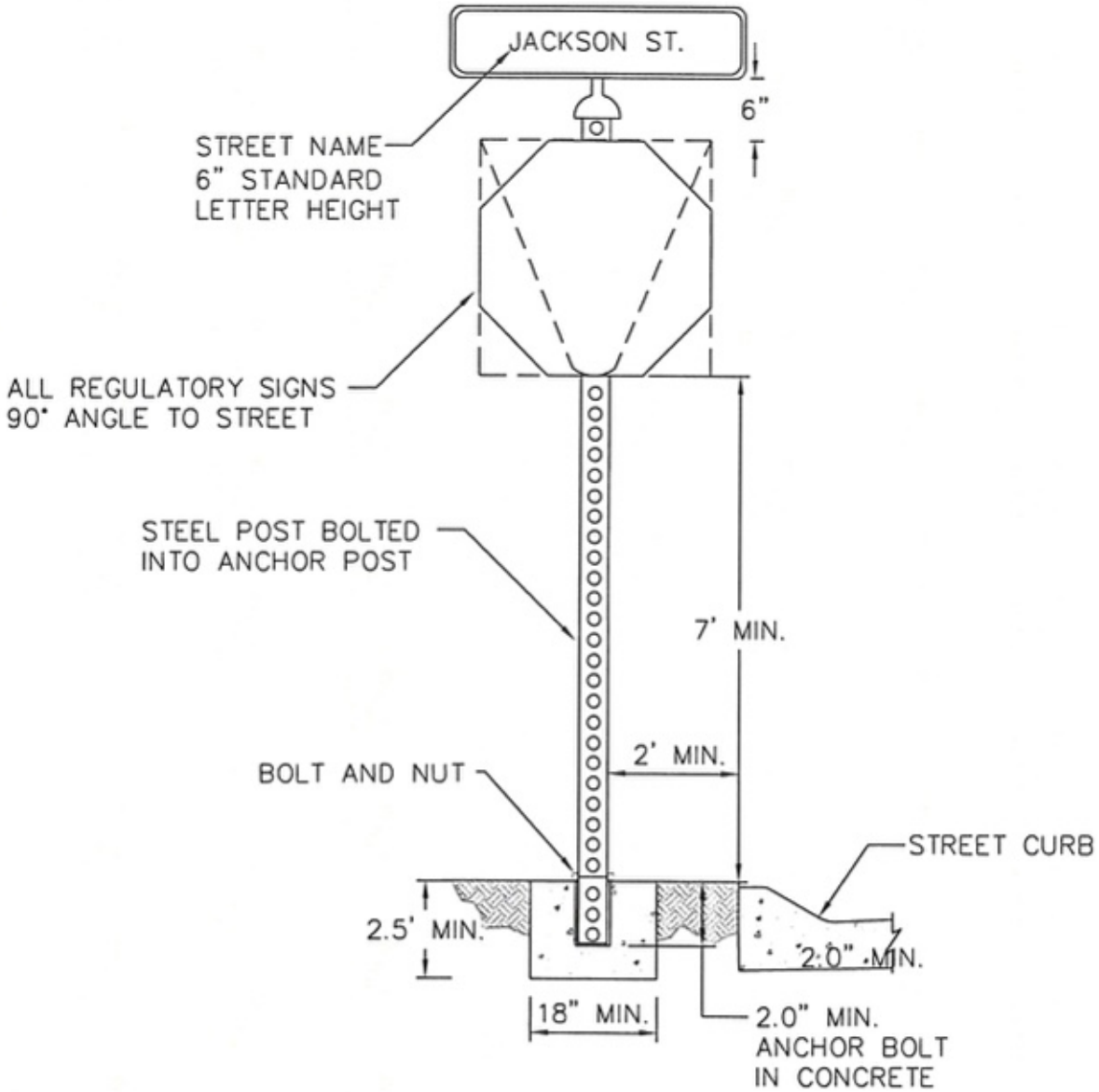

NOTES:

1. ALL REGULATORY SIGNS SHALL BE ALUMINUM.
2. SIZES SHALL MEET THE MIN REQUIREMENTS OF WYDOT AND MUTCD.
3. SIGN FACE MATERIAL SHALL BE MIN. ENGINEER GRADE TAPES (REFLECTIVE)
4. POST SIZES & MATERIALS: POST–2" SQUARE PERFORATED STEEL POST. ANCHOR POST–2 ¼" SQUARE PERFORATED STEEL ANCHOR POST.
5. HARDWARE–BOLTS & NUTS
6. STREET NAME SIGNS SHALL BE 6" ABOVE STOP SIGNS AND/OR YIELD SIGNS.
7. MINIMUM EMBEDMENT OF ANCHOR POST SHALL BE 2.0' FROM GROUND LEVEL.
8. ALL SIGNS SHALL BE INSTALLED SUCH THAT THE FACE IS PERPENDICULAR TO THE DRIVE LANE.

STREET SIGN DETAIL	ST–104	DATE: *1/17/07*
	SCALE: *NTS*	

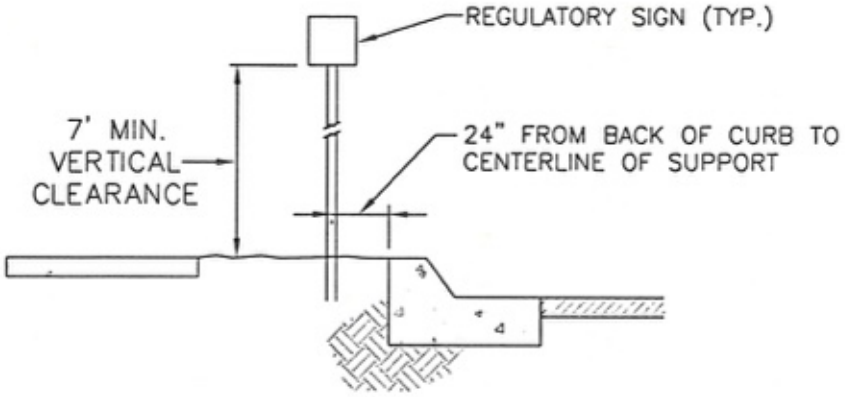

PARKWAY PLACEMENT

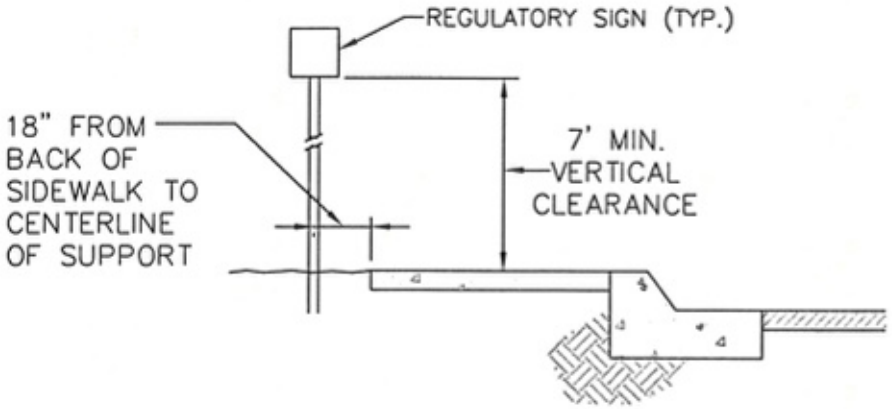

CONTIGUOUS SIDEWALK
PREFERRED PLACEMENT

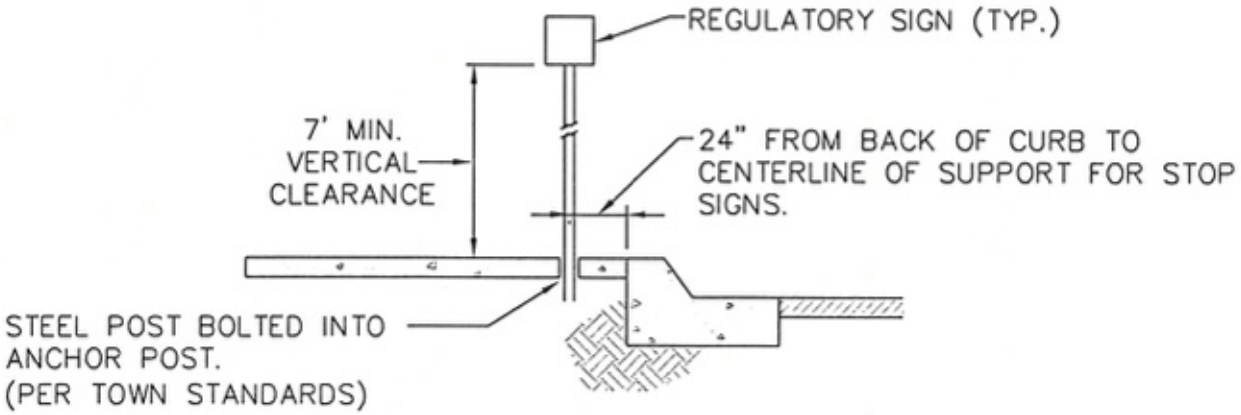

CONTIGUOUS SIDEWALK
ALTERNATIVE PLACEMENT

NOTES:
1. HORIZONTAL CLEARANCES AROUND SIGNAGE SHALL CONFORM TO TOWN STANDARDS.
2. SIGNS SHALL BE INSTALLED SUCH THAT THE FACE IS PERPENDICULAR TO THE DRIVE LANE.

TOWN OF JACKSON WYOMING	*SIGNAGE PLACEMENT*	ST-105 DATE: *1/17/07*
		SCALE: *NTS*

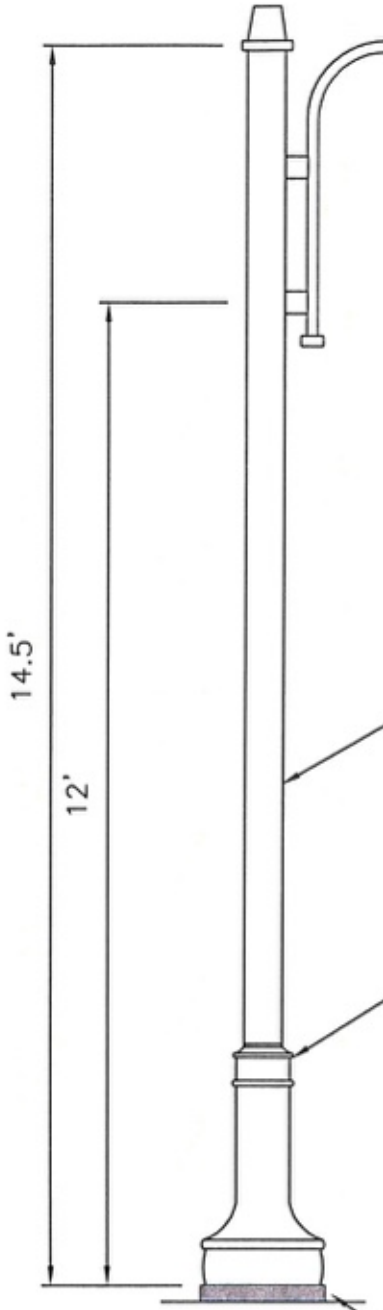

HEAD BY HADCO: CAST ALUMINUM FIXTURE. LAMP STYLE MCP100/U/MED/830-PB HID WITH DROP LENSE AND A SPECULAR REFLECTOR FIXTURE TO HAVE A GASKETED DOOR FRAME, HADCO PART # S8270-85 WATT IND-240 (ASSEMBLY MUST BE PRE-APPROVED BY THE TOWN.

BALLAST: ADV IMH 100 ALFM 70/100 277V MH BAL (OR APPROVED, LIKE STYLE)

FINISH:
HADCO "J" GREEN

POLE BY MOUNTAIN STATES #1455SP-4.5-17 UU-SA/SH HADCO "J" GREEN, 14.5' STRAIGHT STEEL POLE PAINTED WITH FIRST 16" OF POLE & BASE PLATE TO BE COATED WITH COLD TAR EPOXY MIN. EPA OF 20 IN 80 MPH ZONE (1.3 GUST FACTOR,ASSEMBLY MUST BE PRE-APPROVED BY THE TOWN)

BASE BY MOUNTAIN STATES PART# UU-17"W x 30"H-HDEB-"J" GREEN HIGH DENSITY ELASTOMER DECORATIVE BASE, DENSITY OF 71 LBS PER CUBIC FOOT. FINISHED WITH A MODIFIED URETHANE BEDLINER COATING (STAYS FLEXIBLE OVER TIME W/MAX ADHESION) BASE TO BE AN AVERAGE OF $\frac{3}{4}$" THICK. (THE ASSEMBLY MUST BE PRE-APPROVED BY THE TOWN)

GROUT AS NEEDED

RIGHT OF WAY STANDARDS:
TOWN OF JACKSON, WYOMING STREET LIGHTING STANDARD TO BE USED FOR STREET LIGHTING & PEDESTRIAN TRAFFIC TO BE USED FOR MID BLOCK AND NON INTERSECTION AREAS OF STREETS AND TRAILS.

MID BLOCK STREET LIGHT	ST-106	DATE: *1/17/07*
	SCALE: *NTS*	

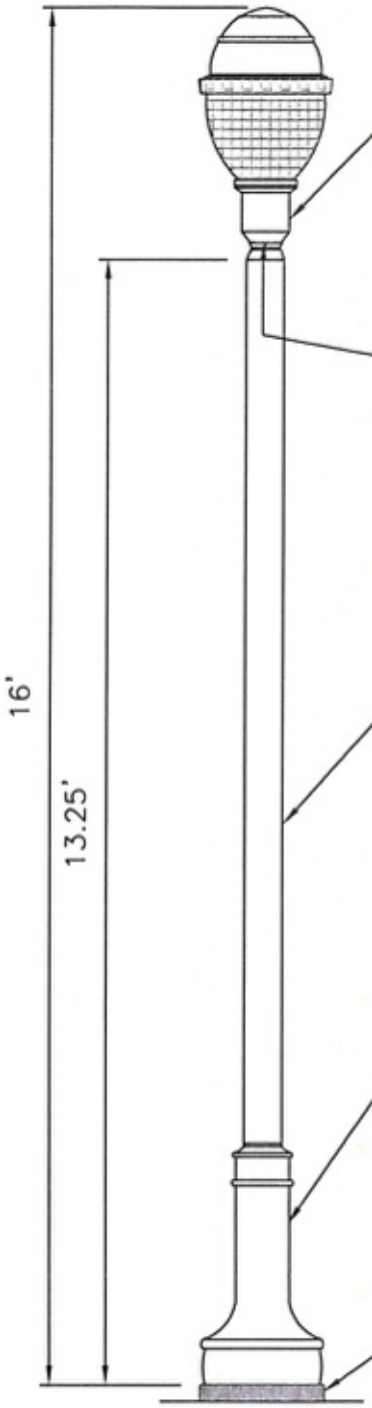

HEAD BY HADCO: CAST ALUMINUM FIXTURE. LAMP STYLE: MCP 100/U/MED/830-PB HID FIXTURE TO HAVE TOOL-LESS ENTRY TO THE BALLAST COMPARTMENT AND TOTALLY MODULAR CONSTRUCTION. REFRACTIVE GLOBE TO HAVE 10 YEAR NON-YELLOWING WARRANTY. HADCO PART #S8457 (THE ASSEMBLY MUST BE PRE-APPROVED BY THE TOWN)

BALLAST STYLE: ADV IMH 100 ALFM 70/100 277V MH BAL (OR APPROVED, LIKE STYLE)

FINISH:
HADCO "J" GREEN

POLE BY MOUNTAIN STATES #1455SP-4.5-17 UU-SA/SH HADCO "J" GREEN, 14.5' STRAIGHT STEEL POLE PAINTED WITH FIRST 16" OF POLE & BASE PLATE TO BE COATED WITH COLD TAR EPOXY MIN. EPA OF 20 IN 80 MPH ZONE (1.3 GUST FACTOR) (ASSEMBLY TO BE PRE-APPROVED BY THE TOWN)

BASE BY MOUNTAIN STATES PART# UU-17"W x 30"H-HDEB-"J" GREEN HIGH DENSITY ELASTOMER DECORATIVE BASE, DENSITY OF 71 LBS PER CUBIC FOOT. FINISHED WITH A MODIFIED URETHANE BEDLINER COATING (STAYS FLEXIBLE OVER TIME W/MAX ADHESION) BASE TO BE AN AVERAGE OF ¾" THICK. (ASSEMBLY TO BE PRE-APPROVED BY THE TOWN)

GROUT AS NEEDED

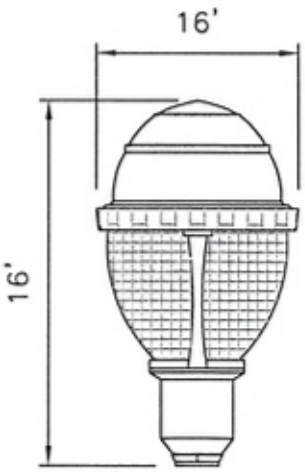

LUMINAIRE

RIGHT OF WAY STANDARDS:
TOWN OF JACKSON, WYOMING STREET LIGHTING STANDARD TO BE USED FOR STREET LIGHTING & PEDESTRIAN TRAFFIC TO BE USED FOR INTERSECTION AREAS OF STREETS AND TRAILS.

INTERSECTION STREET LIGHT	ST-107	DATE: *1/17/07*
	SCALE: *NTS*	

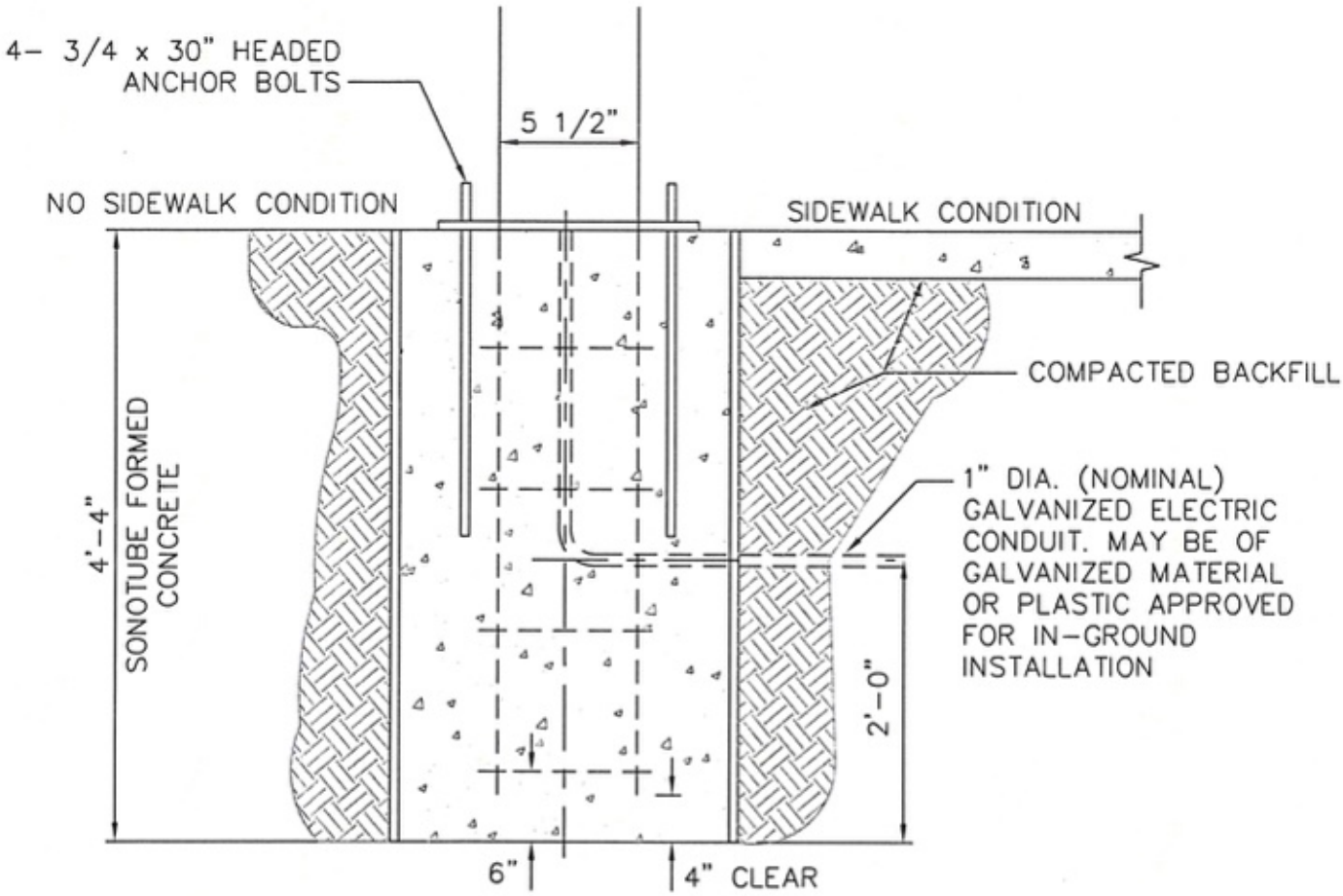

FOUNDATION AND BASE ELEVATION

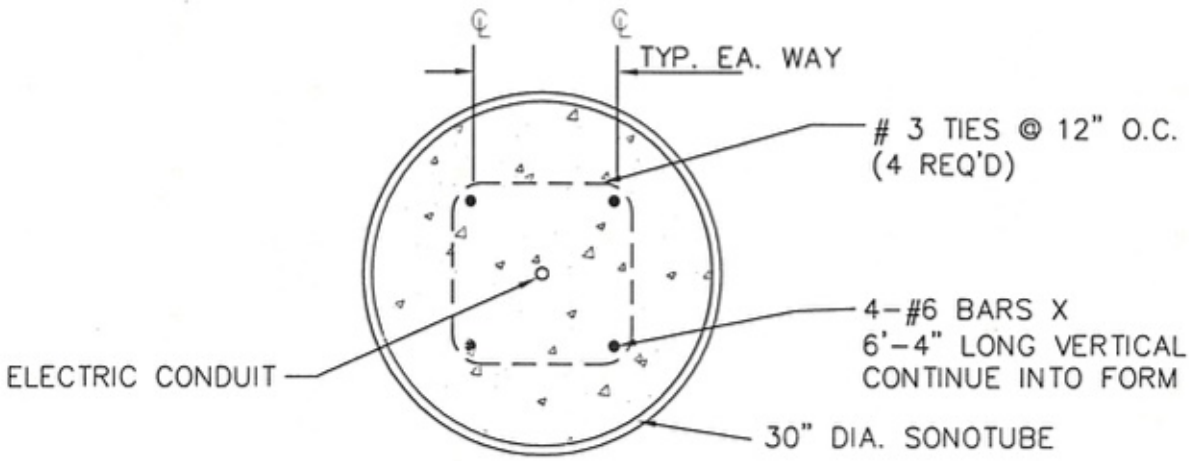

SECTION A-A

NOTE:
BASE SHALL BE OF 3000 PORTLAND CEMENT CONCRETE CONFORMING WITH WPWSS 03304, PART 2.08 AND BE INTEDRALLY COLORED WITH DAVIS COLORS NUMBER 5237 (SANDSTONE).

STREET LIGHT BASE	ST-108	DATE: *1/17/07*
	SCALE: *NTS*	

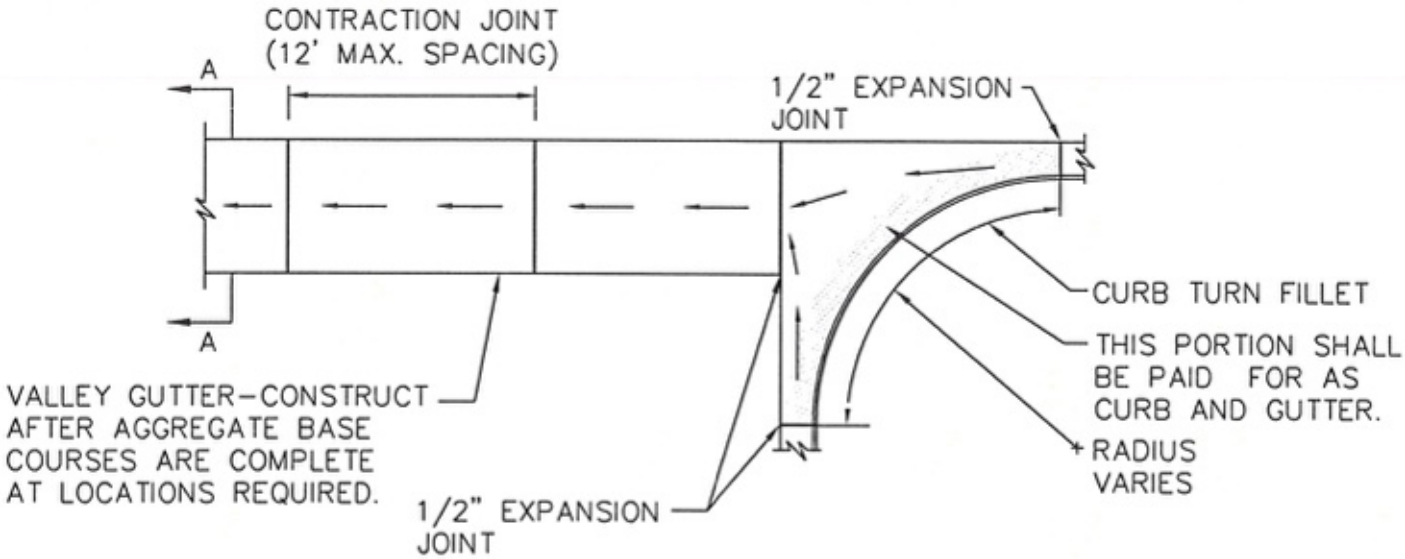

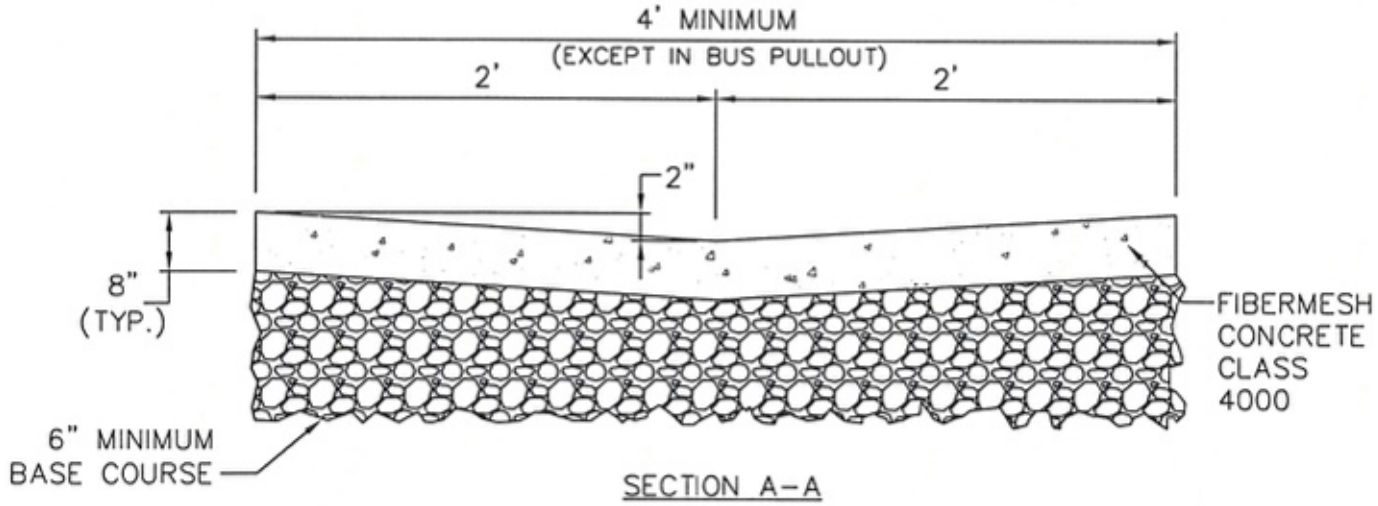

NOTES:

1. VALLEY GUTTERS AND CURB TURN FILLETS SHALL CONFORM TO WPWSS SECTION 02528, EXCEPT THAT PORTLAND CEMENT CONCRETE SHALL BE FIBERMESH CLASS 4000 CONCRETE CONFORMING WITH WPWSS SECTION 03304, PART 2.08.

2. AGGREGATE BASE COURSE SHALL BE SIX INCH MINIMUM THICKNESS, CONFORM TO WPWSS SECTION 02190, PART 2.03, GRADING H, AND BE INSTALLED PER WPWSS SECTION 02231, PART 3.03.

3. REMOVAL AND REPLACEMENT OF VALLEY GUTTER SHALL TAKE PLACE IN FULL PANELS.

TOWN OF JACKSON WYOMING	*VALLEY GUTTER AND CURB TURN FILLET*	ST-109 DATE: *1/17/07*
		SCALE: *NTS*

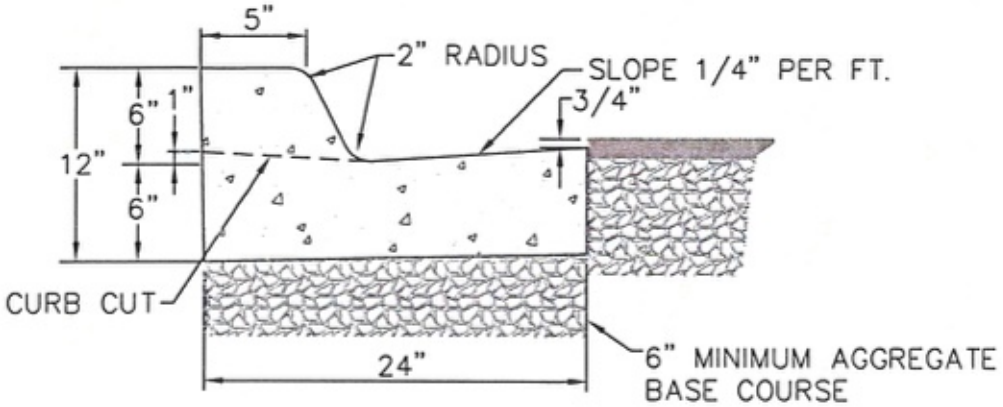

VERTICAL CURB

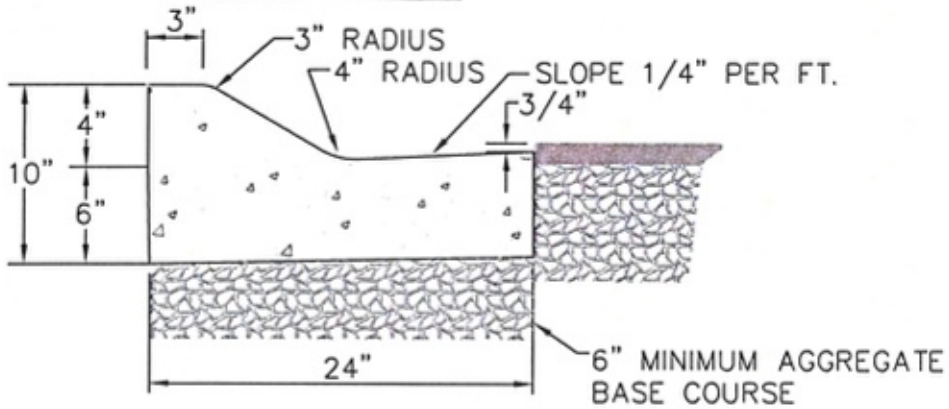

ROLL CURB

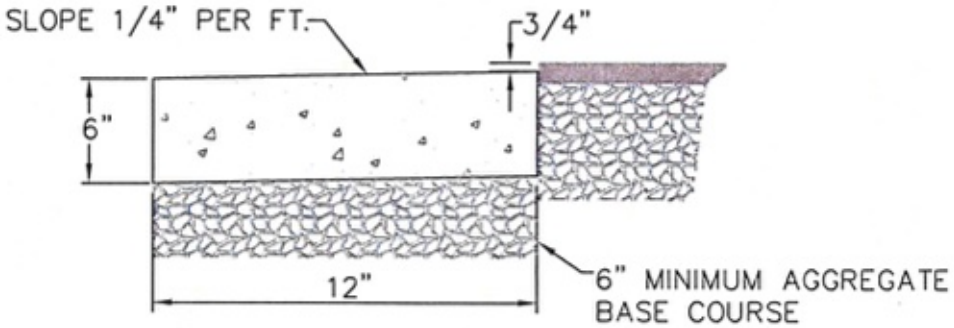

RIBBON CURB

NOTES:

1. CURBS SHALL CONFORM TO WPWSS SECTION 02525, EXCEPT THAT PORTLAND CEMENT CONCRETE SHALL BE FIBERMESH-REINFORCED CLASS 4000 CONCRETE CONFORMING WITH WPWSS SECTION 03304, PART 2.07.

2. AGGREGATE BASE COURSE SHALL BE SIX INCH MINIMUM THICKNESS, CONFORM TO WPWSS SECTION 02190, PART 2.03, GRADING H, AND BE INSTALLED PER WPWSS SECTION 02231, PART 3.03.

3. REMOVAL AND REPLACEMENT OF CURB SHALL TAKE PLACE IN FULL PANELS.

4. VERTICAL CURB SHALL BE USED IN PREFERENCE TO ROLL CURB.

TOWN OF JACKSON WYOMING	*CURB SECTIONS*	ST-110 DATE: *1/17/07*
		SCALE: *NTS*

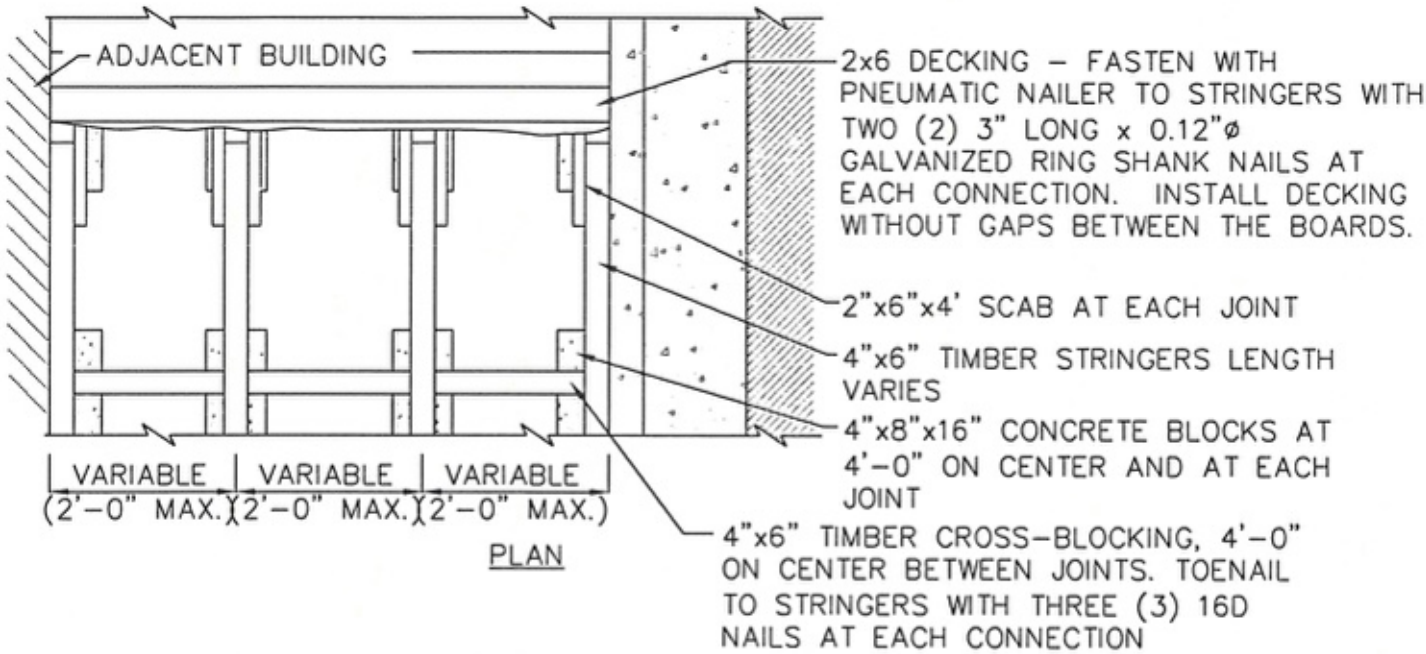

PLAN

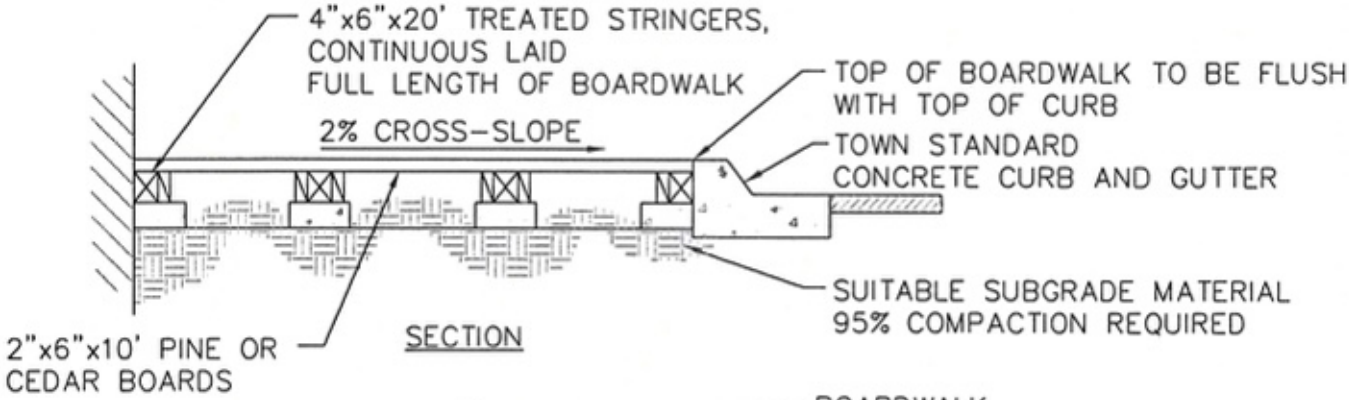

SECTION

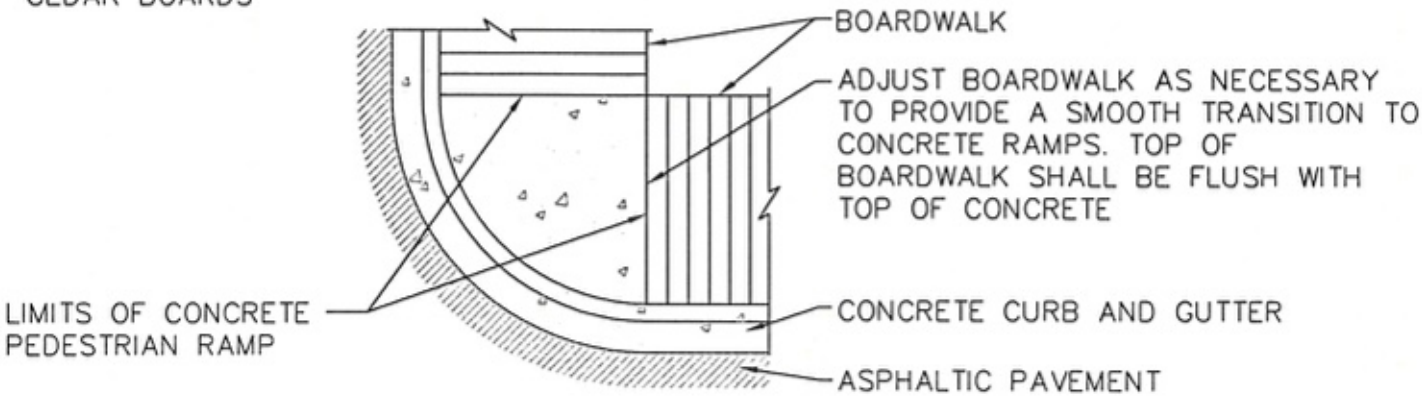

INTERSECTION PLAN DETAIL

NOTES:

1. UNLESS OTHERWISE NOTED, ALL NAILS TO BE 16D GALVANIZED. MINIMUM OF TWO NAILS PER BOARD.
2. ALL LUMBER TO BE PRESSURE TREATED.
3. INSTALL CLIPPED BOARDS WITH CROWN UP.
4. PEDESTRIAN RAMP TO BE PER TOWN STANDARD.

TOWN OF JACKSON WYOMING	*BOARDWALK*	ST-111 DATE: *1/17/07*
		SCALE: *NTS*

TYPE 1

TYPE 2

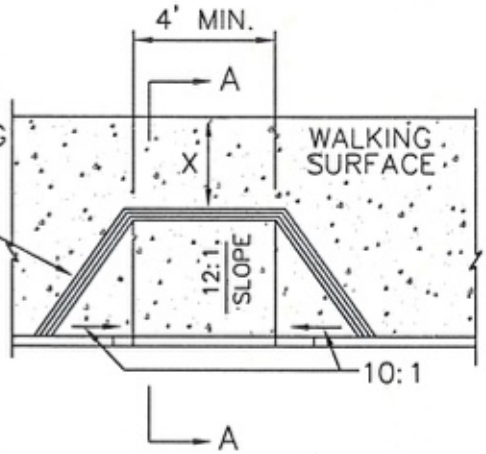

TYPE 2A

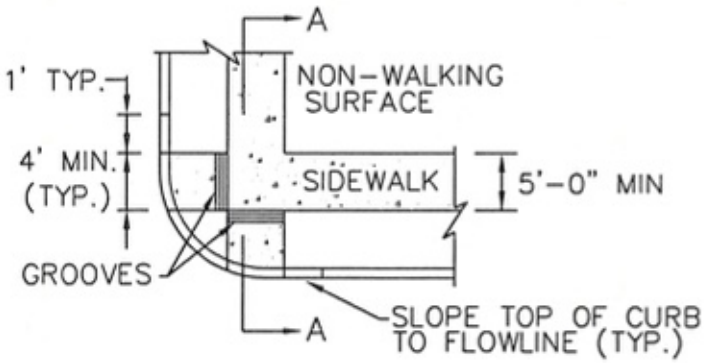

TYPE 3

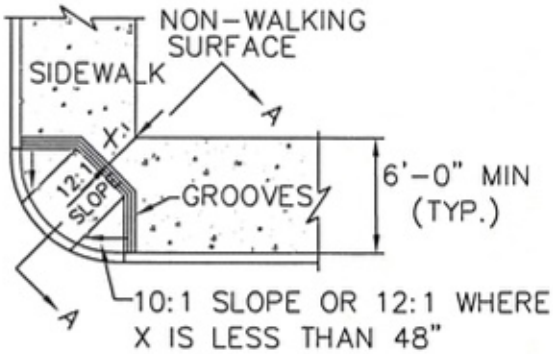

TYPE 4

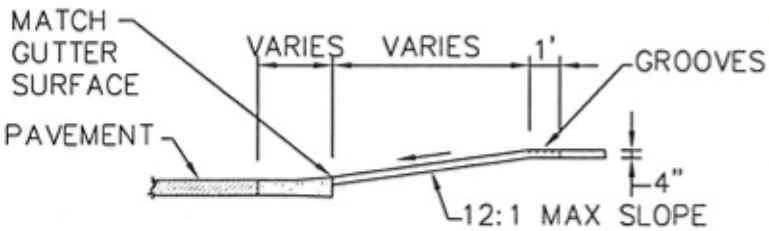

SECTION A-A

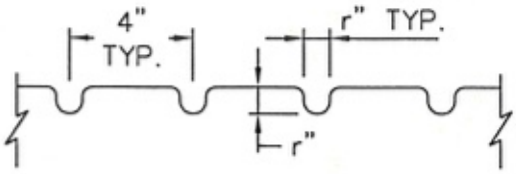

GROOVING DETAIL

NOTES:

1. SIDEWALKS SHALL CONFORM TO ALL APPLICABLE ADA STANDARD REQUIREMENTS.
2. LIP AT GUTTER TO BE NO MORE THAN ¼" HIGH.
3. CONCRETE TO BE A BROOM FINISH.

TOWN OF JACKSON WYOMING	*PEDESTRIAN RAMPS*	ST-112 DATE: *1/17/07*
		SCALE: *NTS*

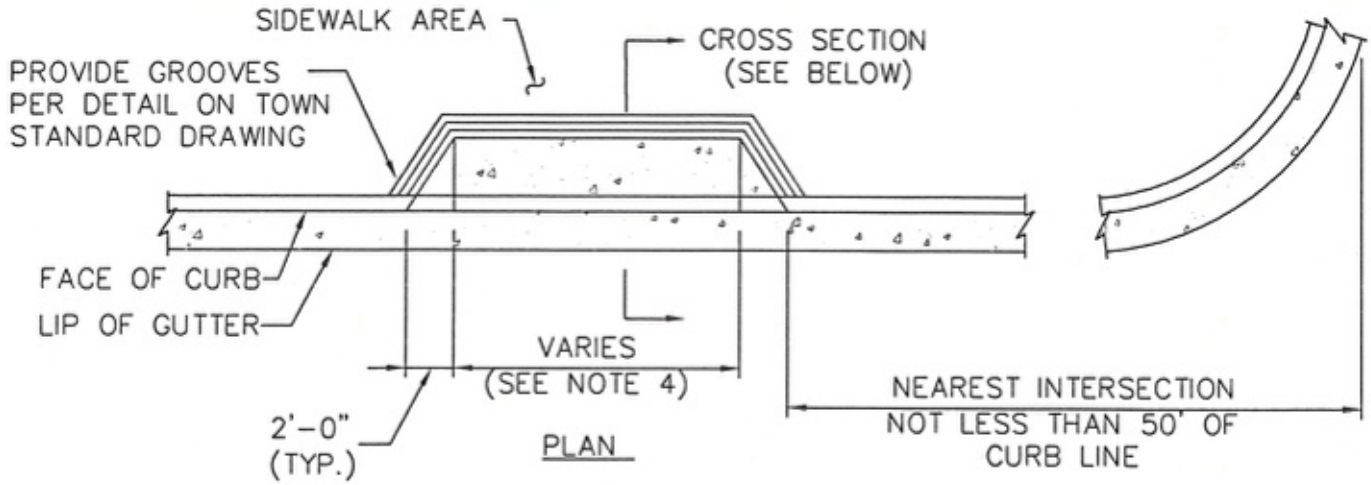

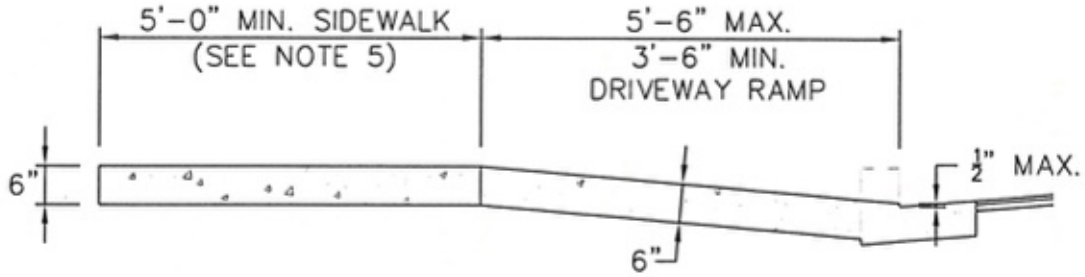

SIDEWALK WITH PARKWAY STRIP SECTION

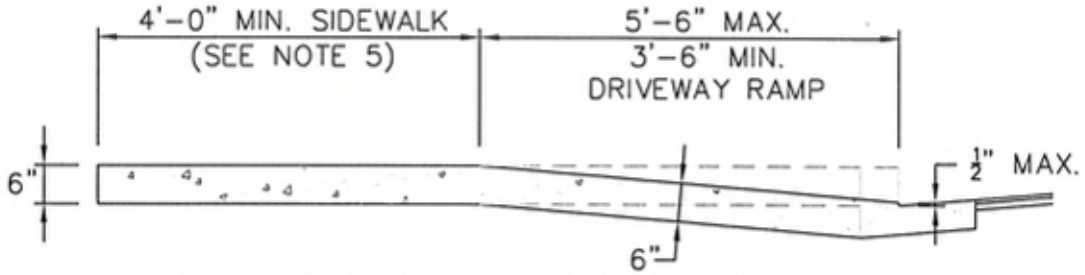

SIDEWALK CONTIGUOUS WITH CURB SECTION

NOTES:

1. DRIVEWAYS AND CURB CUT SHALL BE INSTALLED TO CONFORM WITIH ALL APPLICABLE ADA STANDARD REQUIREMENTS
2. CONCRETE DRIVEWAY RAMPS/CURB CUTS AND ASSOCIATED ADJACENT SIDEWALK SHALL CONFORM TO WPWSS SECTION 02776, EXCEPT THAT PORTLAND CEMENT CONCRETE SHALL BE FIBERMESH-REINFORCED CLASS 4000 CONCRETE CONFORMING WITH WPWSS SECTION 03304, PART 2.07.
3. AGGREGATE BASE COURSE SHALL BE SIX INCH MINIMUM THICKNESS, CONFORM TO WPWSS SECTION 02190, PART 2.03, GRADING H, AND BE INSTALLED PER WPWSS SECTION 02231, PART 3.03.
4. THE FLAT BOTTOM WIDTH DIMENSION OF CURB CUTS SHALL NOT EXCEED THE DIMENSIONS SET FORTH IN THE TOWN LAND DEVELOPMENT REGULATIONS.
5. THE ENTIRE SIDEWALK AND RAMP SHALL BE DEPRESSED AND INSTALLED AT A MAXIMUM CROSS-SLOPE OF 2%. LONGITUDINAL SLOPE (ALONG THE SIDEWALK) AT EACH END OF THE DEPRESSED SECTION SHALL NOT BE STEEPER THAN 1:12.
6. SIDEWALK CONSTRUCTION SHALL BE PER TOWN STANDARDS.

TOWN OF JACKSON WYOMING	*DRIVEWAY CURB CUT*	ST-113	DATE: *1/17/07*
		SCALE: *NTS*	

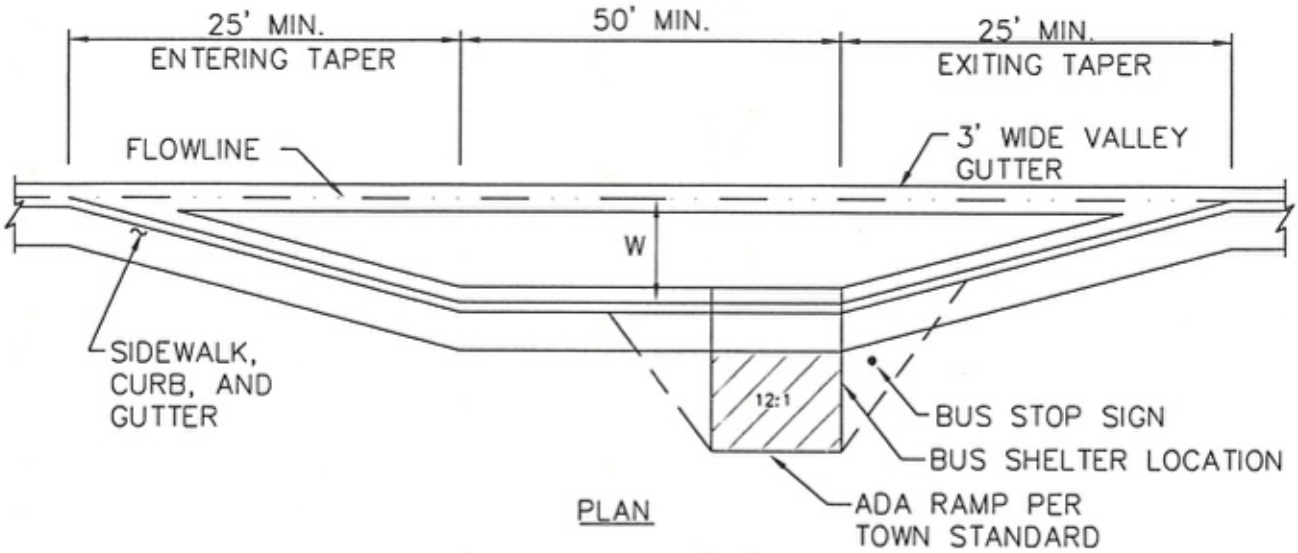

PLAN

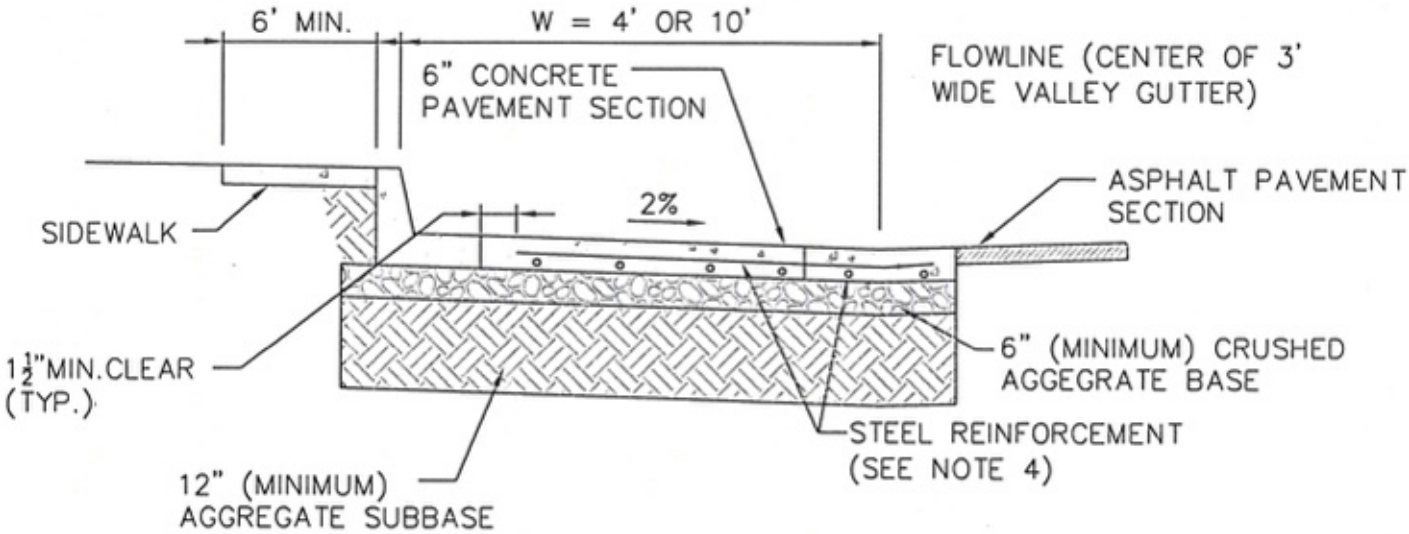

SECTION

NOTES:

1. RAMP TO BE INSTALLED TO MEET ALL ADA STANDARD REQUIREMENTS.
2. CONCRETE BUS TURNOUTS, INCLUDING ASSOCIATED VALLEY GUTTERS, SHALL CONFORM TO WPW22 SECTION 02776, EXCEPT THE FOLLOWING:
   A. PORTLAND CEMENT CONCRETE SHALL BE FIBERMESH-REINFORCED CLASS 4000 CONCRETE CONFORMING WITH WPWSS SECTION 03304, PART 2.08.
   B. AGGREGATE BASE COURSE SHALL CONFORM TO WPWSS SECTION 02190, PART 2.03, GRADING H.
   C. AGGREGATE SUBBASE COURSE SHALL BE PIT RUN OR SCREENED MATERIAL, THE MAXIMUM SIZE NOT TO EXCEED SIX INCHES.
   D. AGGREGATE BASE AND SUBBASE MATERIALS SHALL BE INSTALLED PER WPWSS 02231, PART 3.03.
3. VALLEY GUTTER SHALL BE PER TOWN STANDARD.
4. STEEL REINFORCEMENT SHALL BE #3 REBAR PLACED AT 12" O.C. EACH WAY HORIZONTALLY, CENTERED WITHIN THE DEPTH OF CONCRETE AND CONFORMING TO WPWSS SECTION 03200.
5. W SHALL BE 10' WHERE NO ON-STREET PARKING LANE EXISTS. WHERE AN ON-STREET PARKING LANE EXISTS, W MAY BE REDUCED TO 4'.

TOWN OF JACKSON WYOMING	*BUS TURNOUT*	ST-114 DATE: *1/17/07*
		SCALE: *NTS*

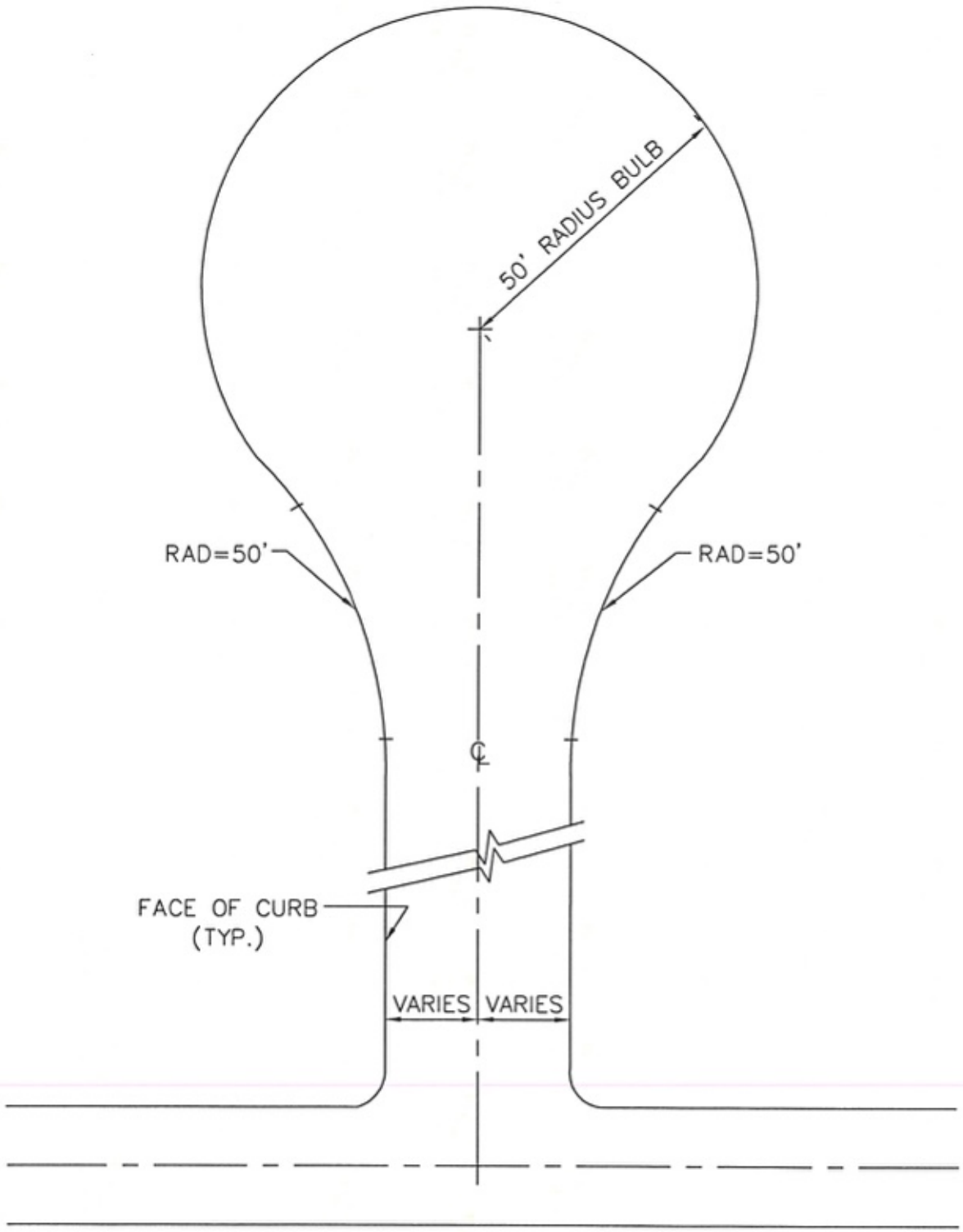

NOTES:

1. LENGTH OF CUL-DE-SAC (FROM CENTERLINE INTERSECTION TO END OF CUL-DE-SAC) SHALL NOT EXCEED 500'.
2. CUL-DE-SACS SHALL BE ALLOWED ONLY WHEN TOPOGRAPHIC OR OTHER NATURAL PHYSICAL CONSTRAINTS PREVENT CONNECTION TO THE SURROUNDING STREET NETWORK.
3. AN OFFSET RADIUS POINT MAY BE UTILIZED WHERE SPECIFICALLY APPROVED BY THE TOWN ENGINEER.

TOWN OF JACKSON WYOMING	*CUL-DE-SAC*	ST-115 DATE: *1/17/07*
		SCALE: *NTS*

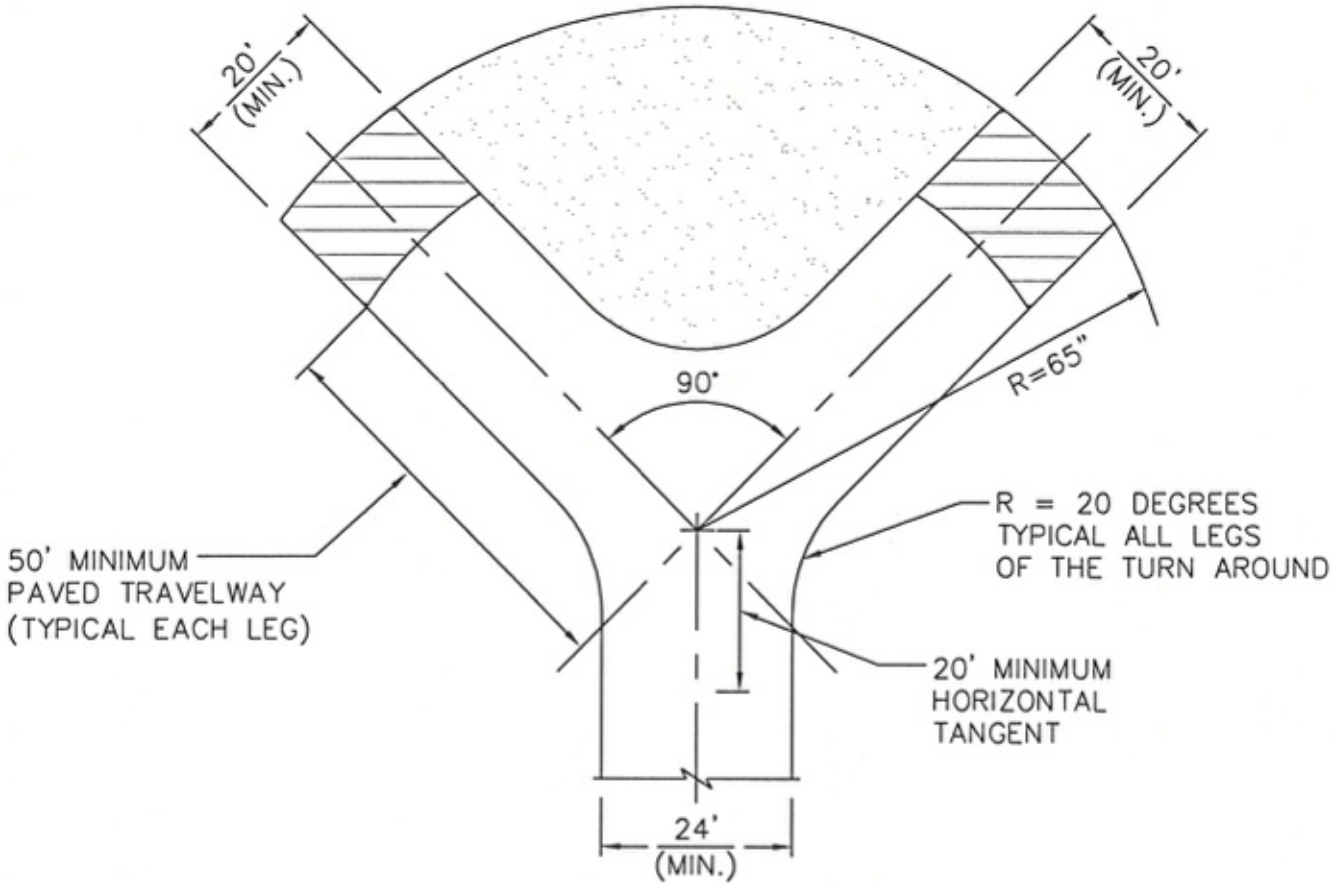

EASMENTS

REQUIRED SNOW STORAGE EASEMENT:
- NO DRIVEWAY ACCESS PERMITTED
- AREA MUST BE GRADED CLEAR OF OBSTRUCTIONS

REQUIRED SNOW STORAGE AND EMERGENCY VEHICLE ACCESS EASEMENT:
- AREA MUST BE GRADED CLEAR OF OBSTRUCTIONS
- AREA MUST BE CAPABLE OF SUPPORTING THE APPLIED LOADS OF FIRE AND EMERGENCY VEHICLES

NOTES:

1. THE GRADE OF THE ENTERING STREET MAY NOT EXCEED PLUS OR MINUS 4%.
2. THE GRADES OF THE LEGS OF THE TURNAROUND MAY BE DIFFERENT FROM ONE ANOTHER (AND FROM THAT OF THE ENTERING STREET), BUT NEITHER MAY EXCEED PLUS OR MINUS 4%.
3. THE SUM OF THE ABSOLUTE VALUES OF THE GRADES OF THE TWO LEGS OF THE TURNAROUND MAY NOT EXCEED 4%.
4. HAMMERHEAD TURNAROUNDS MAY ONLY BE USED ON LOCAL STREETS SERVING ONLY LOW DENSITY RESIDENTIAL PROPERTIES IN AREAS WITH TOPOGRAPHIC CONSTRAINTS.

TOWN OF JACKSON WYOMING	*HAMMERHEAD TURNAROUND*	ST-116 DATE: *1/17/07*
		SCALE: *NTS*

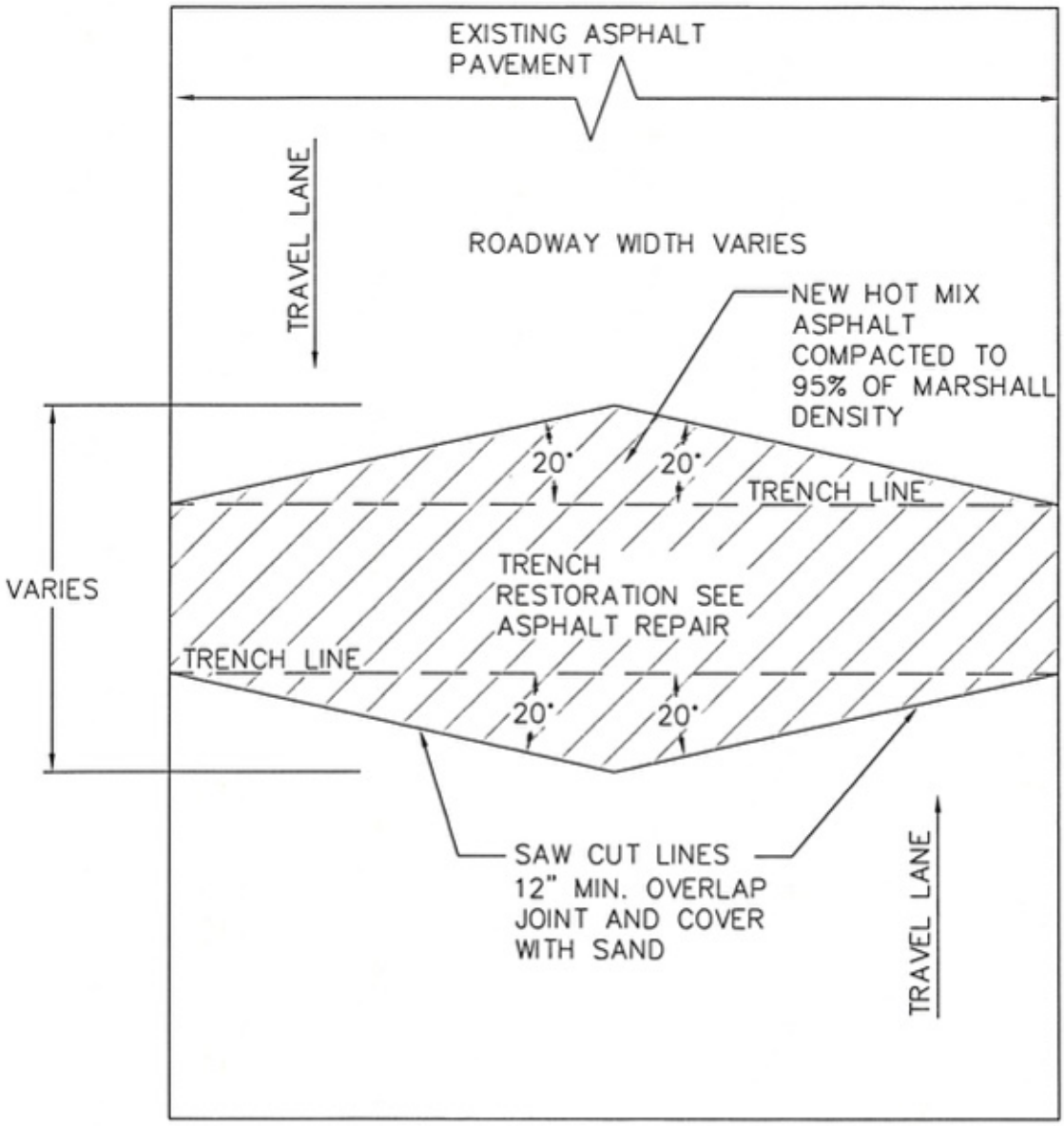

NOTES:

1. 20' DIAMOND PATCH TO BE CONSTRUCTED WHEN REQUIRED BY PUBLIC WORKS DEPARTMENT.

2. PLACEMENT OF ASPHALT SHALL BE 1" GREATER THAN EXISTING AND NO LESS THAN 3" MIN. ALSO SEE THE ASPHALT PATCH REPAIR DETAIL.

3. HOT MIX ASPHALT SHALL MEET THE APPLICABLE REQUIREMENTS OF WYOMING PUBLIC WORKS STANDARDS AND SPECIFICATIONS FOR BITUMINOUS MATERIALS.

TRENCH RESTORATION DETAIL	ST-117	DATE: *1/17/07*
	SCALE: *NTS*	

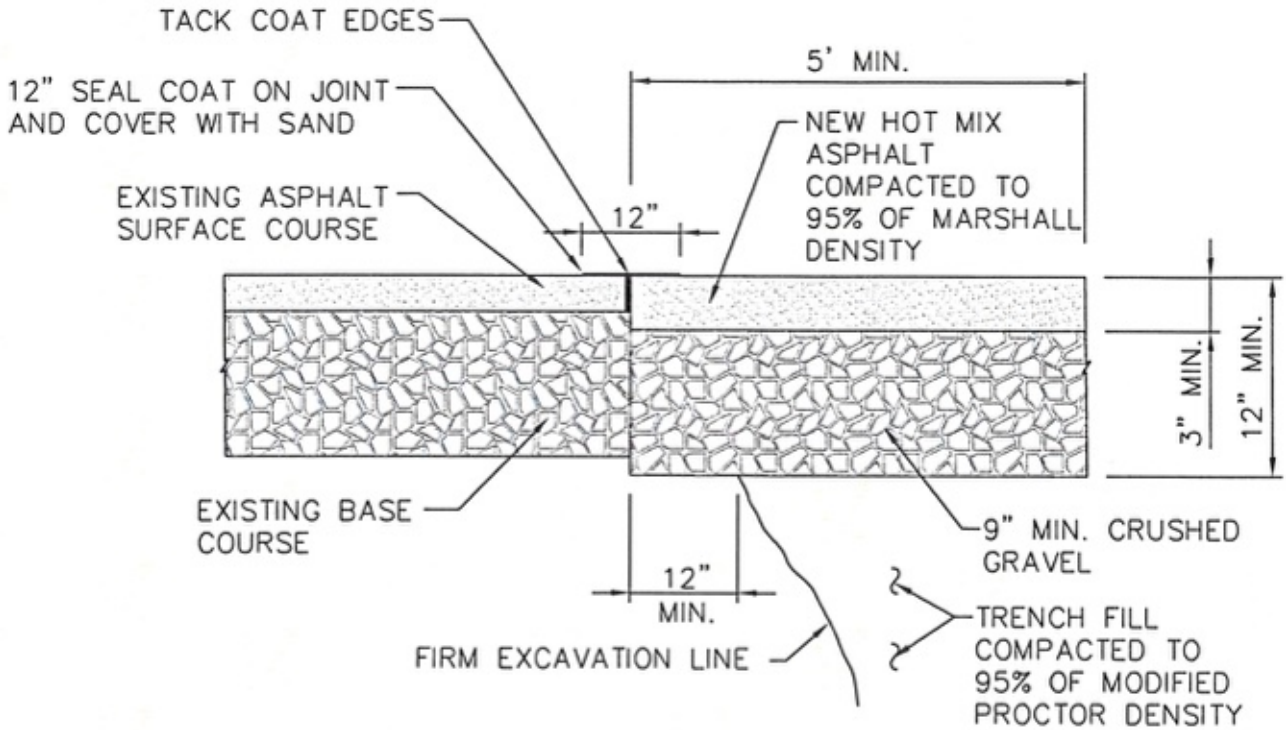

BITUMINOUS MATERIAL SHALL MEET THE APPLICABLE REQUIREMENTS OF SECTION 02545 BITUMINOUS MATERIALS OF WYOMING PUBLIC WORKS STANDARDS AND SPECIFICATIONS

ASPHALT PATCH REPAIR DETAIL

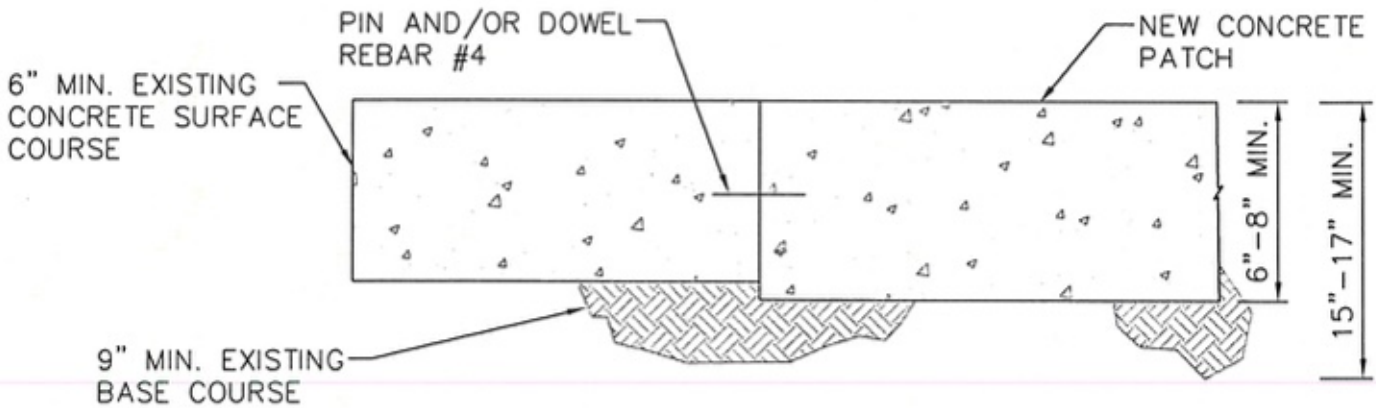

CONCRETE PATCH REPAIR DETAIL

NOTES:

1. REPLACEMENT ASPHALT THICKNESS SHALL BE 1" GREATER THAN EXISTING AND NO LESS THAN 3" MINIMUM.
2. ASPHALT SHALL BE PLACED IN TWO (2) LIFTS, EACH NO LESS THAN $1\frac{1}{2}$" IN THICKNESS, AND COMPACTED TO 95% OF MARSHALL DENSITY.
3. PORTLAND CEMENT CONCRETE PAVEMENT SHALL MEET APPLICABLE REQUIREMENTS OF SECTION 02520, 02776 AND 03304 AS DIRECTED BY TOWN PUBLIC WORKS DEPARTMENT.

ASPHALT & CONCRETE PATCH REPAIR CROSS SECTIONS	ST-118	DATE: *1/17/07*
	SCALE: *NTS*	

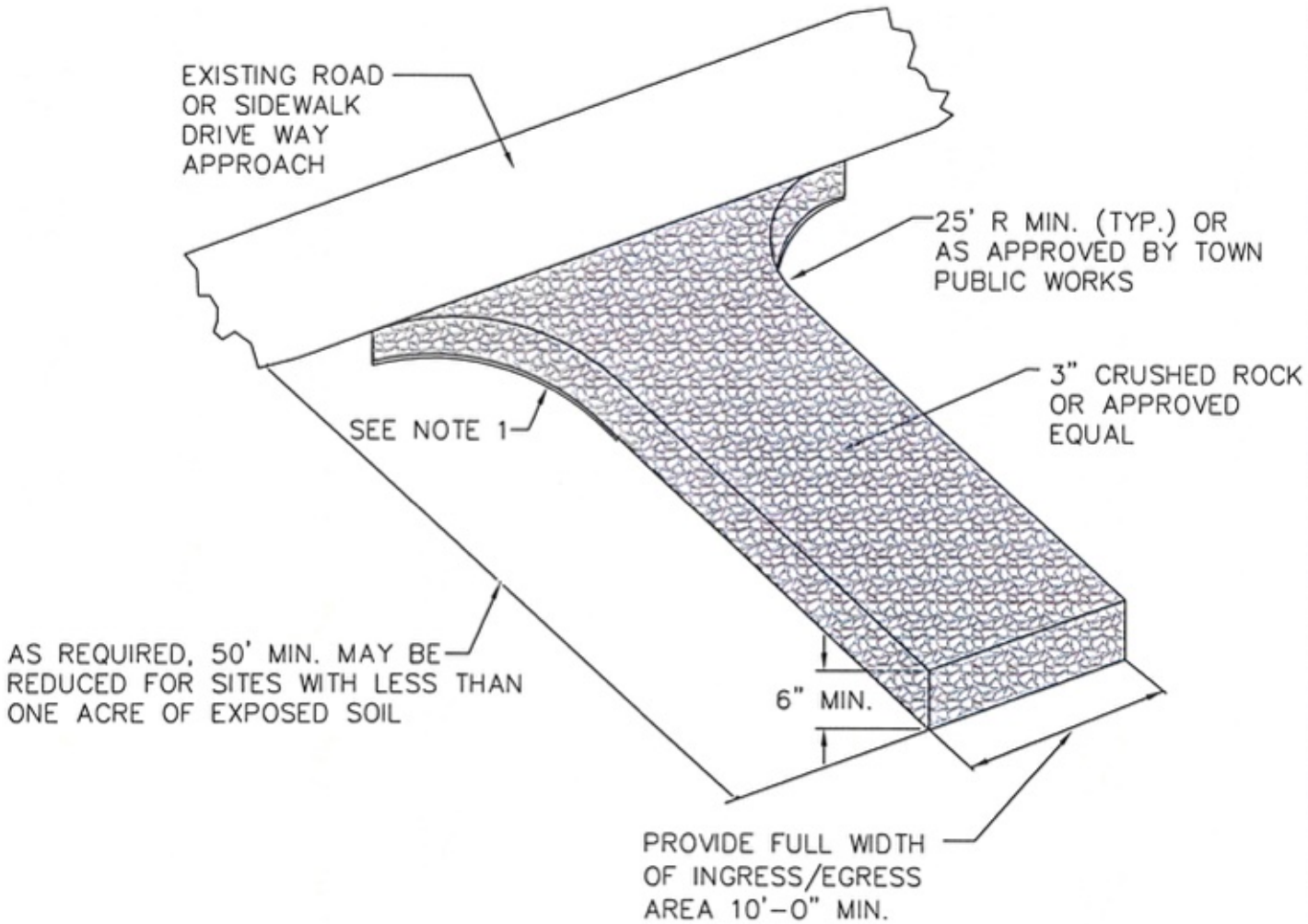

NOTES:

1. PLACE CONSTRUCTION GEOTEXTILE FOR SOIL STABILIZATION UNDER THE CRUSHED ROCK FROM THE EDGE OF THE EXISTING ROADWAY TO THE RADIUS RETURNS, OR AS DIRECTED BY PUBLIC WORKS.
2. ENTRANCE SHALL BE REMOVED AND RECONSTRUCTED AS REQUIRED TO PREVENT EXCESS TRACKING OF MATERIALS ONTO RIGHT-OF-WAY, OR WHEN DIRECTED BY THE TOWN PUBLIC WORKS DEPARTMENT.

TOWN OF JACKSON WYOMING	*STABILIZED CONSTRUCTION ENTRANCE*	ST-119 DATE: *1/17/07*
		SCALE: *NTS*

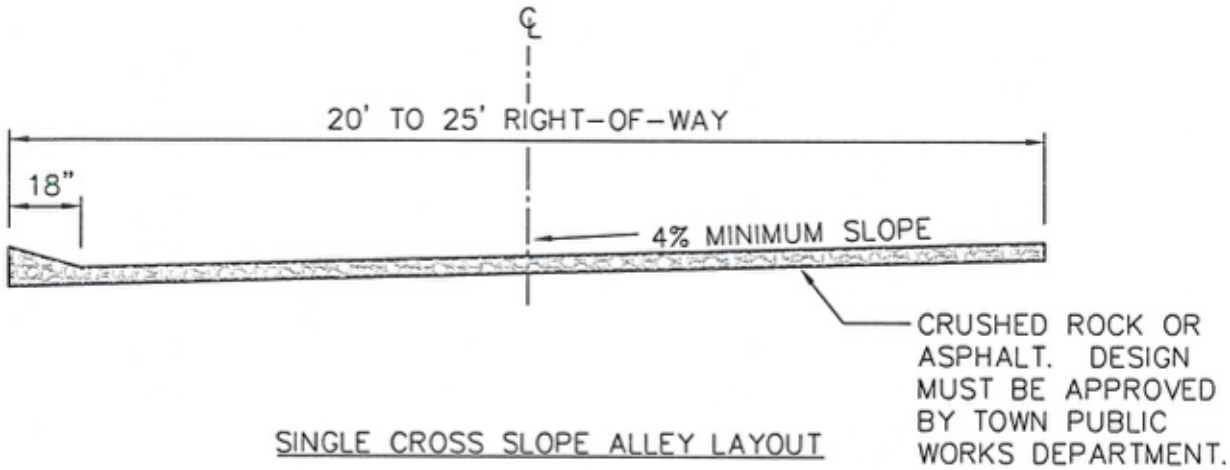

SINGLE CROSS SLOPE ALLEY LAYOUT

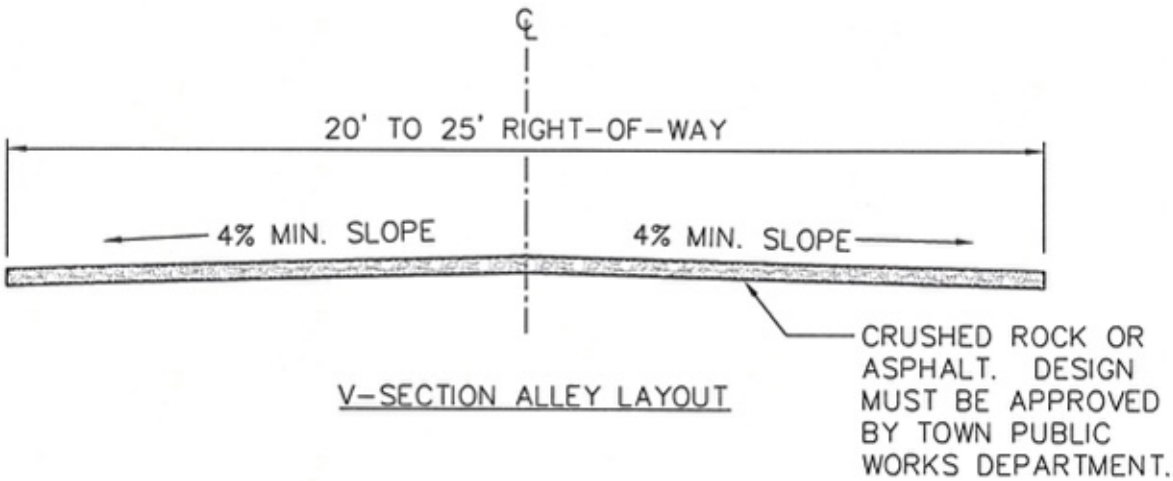

V-SECTION ALLEY LAYOUT

NOTES:

1. ALLEY STRUCTURAL MINIMUM SPECIFICATIONS:
   WITHOUT ASPHALTIC CONCRETE SURFACE:
   9" WPWSS GRADING H BASE COURSE OVER 12" PITRUN SUB-BASE, INSTALLED PER WPWSS SECTION 02331, PART 3.03.
   WITH ASPHALTIC CONCRETE SURFACE:
   3" ASPHALTIC CONCRETE OVER 6" WPWSS GRADING H BASE COURSE OVER 12" OF PITRUN SUB-BASE, INSTALLED PER WPWSS SECTION 02231, PART 3.03.

2. ALLEYS SHALL BE CONSTRUCTED WITH A GRAVEL SURFACE UNLESS OTHERWISE SPECIFICALLY DIRECTED BY THE TOWN PUBLIC WORKS DEPARTMENT.

3. ALLEYS ARE TYPICALLY PROVIDED WITH A GRADE ALONG THEIR LENGTH BUT WITH NO TRANSVERSE (SIDEWAYS) GRADE. IN ANY EVENT, THEY SHALL BE SLOPED TO PROVIDE POSITIVE DRAINAGE PER APPROVAL OF THE TOWN ENGINEER.

4. ALLEY SECTIONS CAN BE V-SECTION OR CROSS SLOPE PER TOWN PUBLIC WORKS DEPARTMENT APPROVAL.

TOWN OF JACKSON WYOMING	*PUBLIC ALLEY SECTIONS*	ST-120 DATE: *1/17/07*
		SCALE: *NTS*

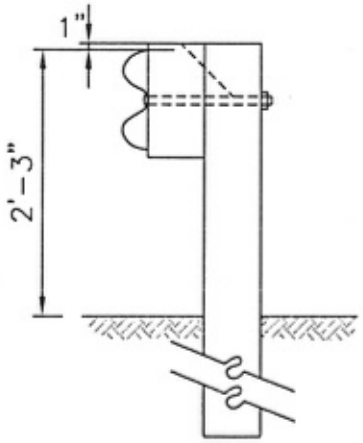

TYPE 1

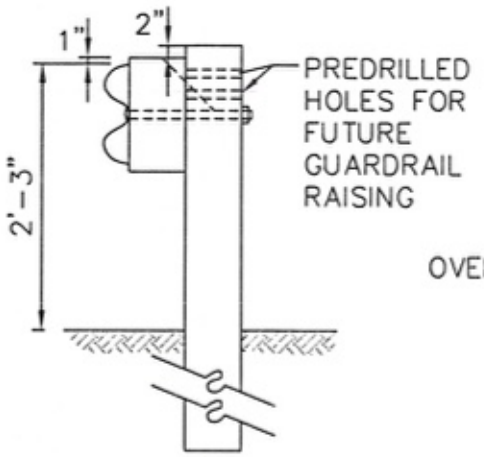

INITIAL INSTALLATION

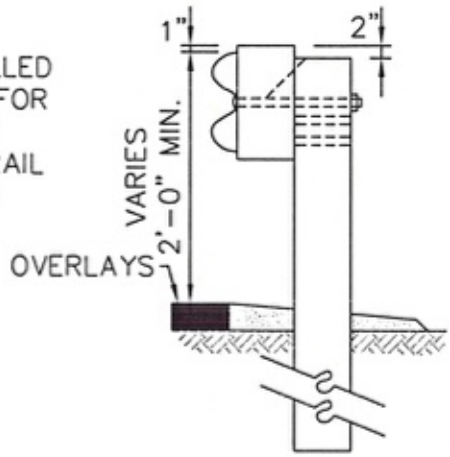

RAIL ELEMENT RAISED

TYPE 1 ALTERNATE

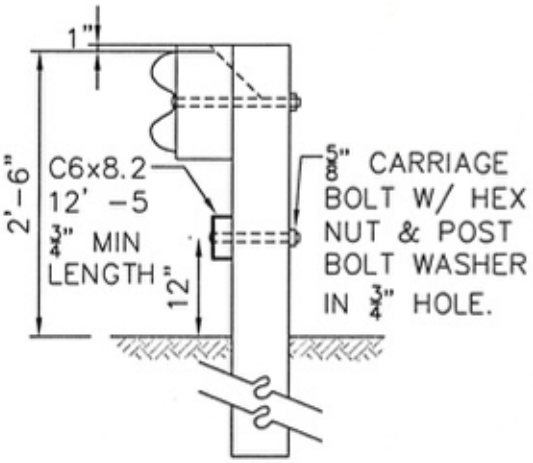

TYPE 2

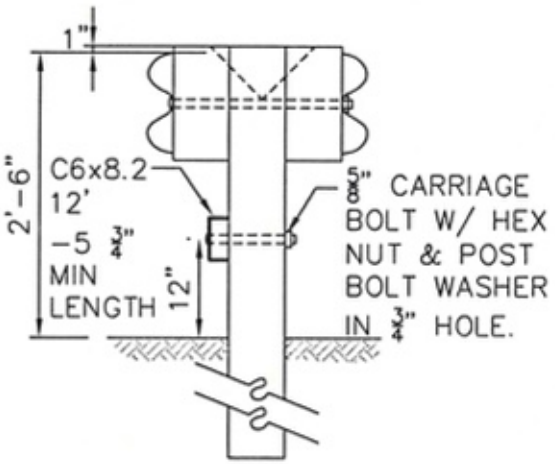

TYPE 3

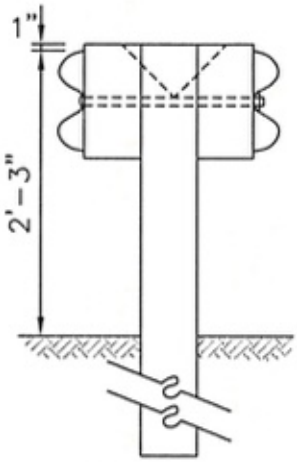

TYPE 4

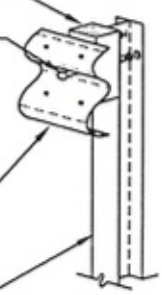

STEEL POST ASSEMBLY
(ALL MOUNTING HARDWARE SAME AS FOR WOOD POST ASSEMBLY, EXCEPT AS NOTED)

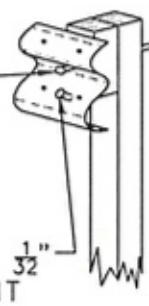

WOOD POST ASSEMBLY DETAIL

TOWN OF JACKSON WYOMING	*BEAM GUARDRAIL (W-BEAM) DETAILS*	ST-121 DATE: 1/17/07
		SCALE: NTS

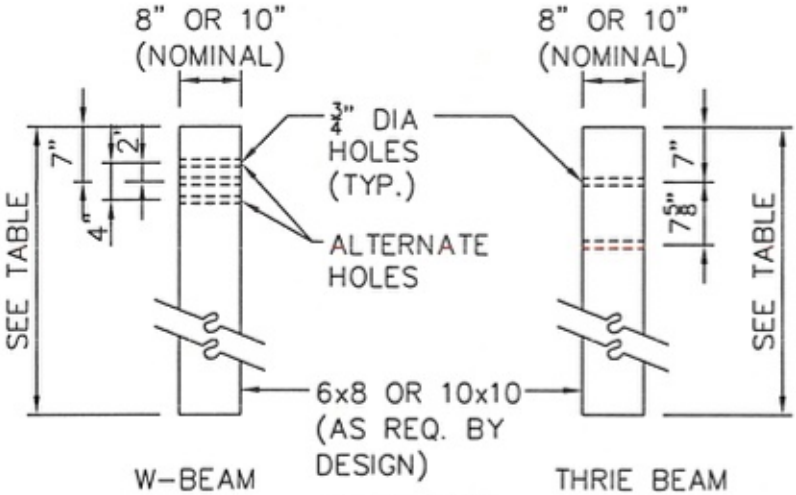

WOOD POST

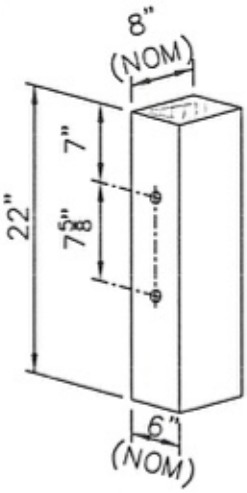

THRIE BEAM WOOD BLOCK
FOR WOOD POST

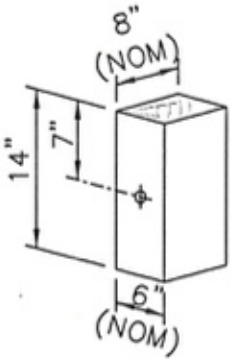

W BEAM WOOD BLOCK
FOR WOOD POST

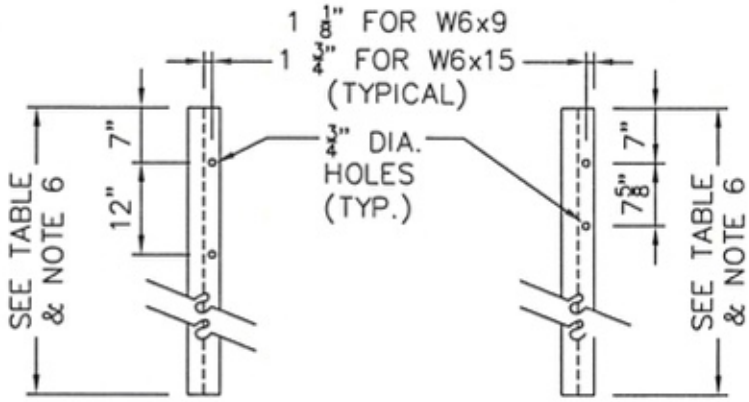

STEEL POST

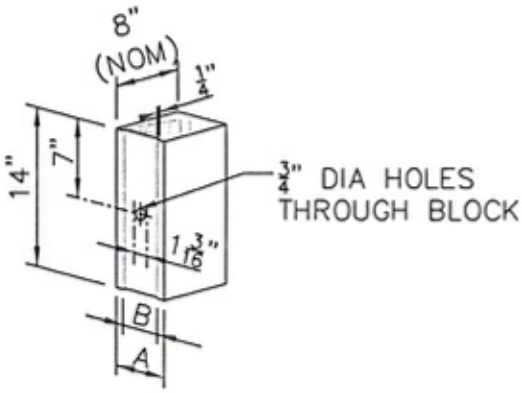

W BEAM WOOD BLOCK
FOR WOOD POST

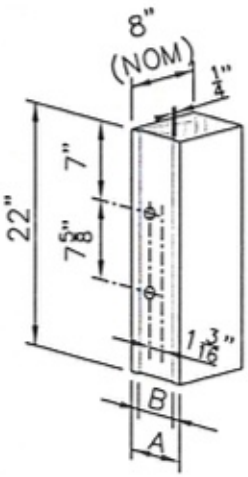

THRIE BEAM WOOD BLOCK
FOR WOOD POST

POST LENGTH TABLE	
GUARDRAIL	LENGTH
1 THROUGH 4	6'-0"
10 OR 11	6'-6"

POST	A	B
W6x9	6" *	$4\frac{1}{4}$"
W6x15	8" *	$6\frac{1}{4}$"

*NOMINAL

BEAM GAURDRAIL POST & BLOCK DETAILS

ST-122 DATE: 12/08/06

SCALE: NTS

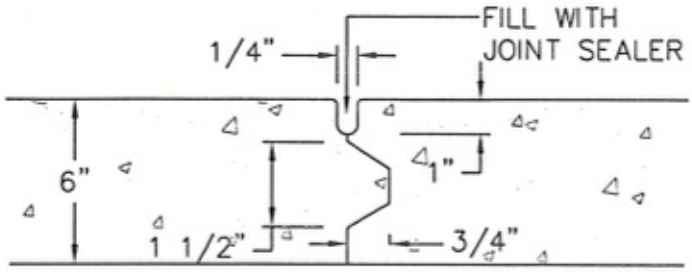

LONGITUDINAL AND TRANSVERSE CONSTRUCTION JOINT
(SEE NOTE 1)

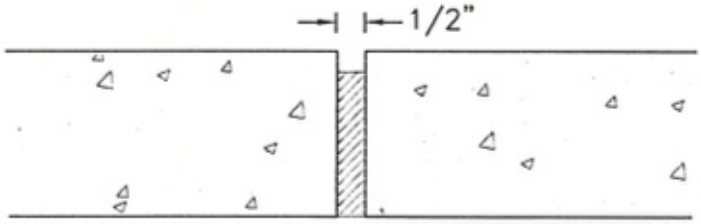

EXPANSION JOINT
(SEE NOTE 2)

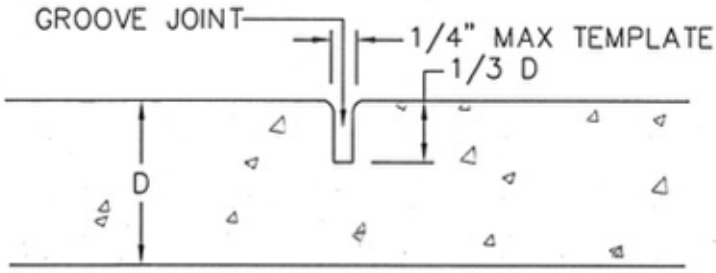

CONTRACTION JOINT
(SEE NOTE 3)

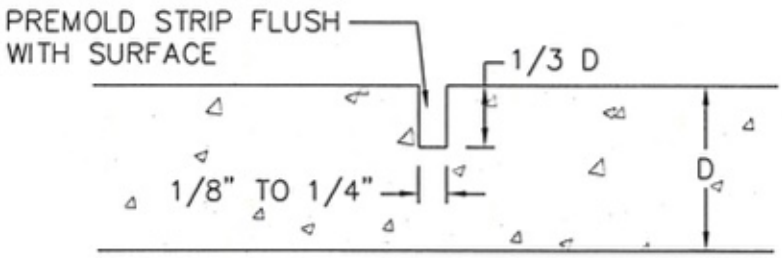

SAWED OR PREMOLDED STRIP LONGITUDINAL OR TRANSVERSE JOINT

NOTE:

1. KEYWAY FORMED BY FASTENING METAL KEY TO FORM.
2. ½" PREMOLDED NON-EXTRUDING EXPANSION JOINT MATERIAL TO MEET AASHTO M-59. EXPANSION MATERIAL SHALL BE INSTALLED WHEN ABUTTING EXISTING CONCRETE OR FIXED STRUCTURES SUCH AS INLETS AND DRIVEWAYS, AND EVERY 300' ON LONG STRAIGHT CONCRETE STRETCHES.
3. FORM WITH TEMPLATE OR SAWCUT JOINTS. IF SAWCUT JOINTS ARE USED, THEY SHALL BEGIN AS SOON AS CONCRETE IS HARDENED SUFFICIENTLY TO PERMIT SAWING WITHOUT EXCESSIVE RAVELING AND BEFORE UNCONTROLLED CRACKING OCCURS. MINIMUM DISTANCE BETWEEN JOINTS IS 5'.
4. JOINT LAYOUT FOR CONCRETE STREETS IS TO BE SUBMITTED TO THE TOWN ENGINEER FOR APPROVAL.

TOWN OF JACKSON WYOMING	*PAVING & CONCRETE JOINT DETAILS*	ST-123 DATE: *1/17/07*
		SCALE: *NTS*

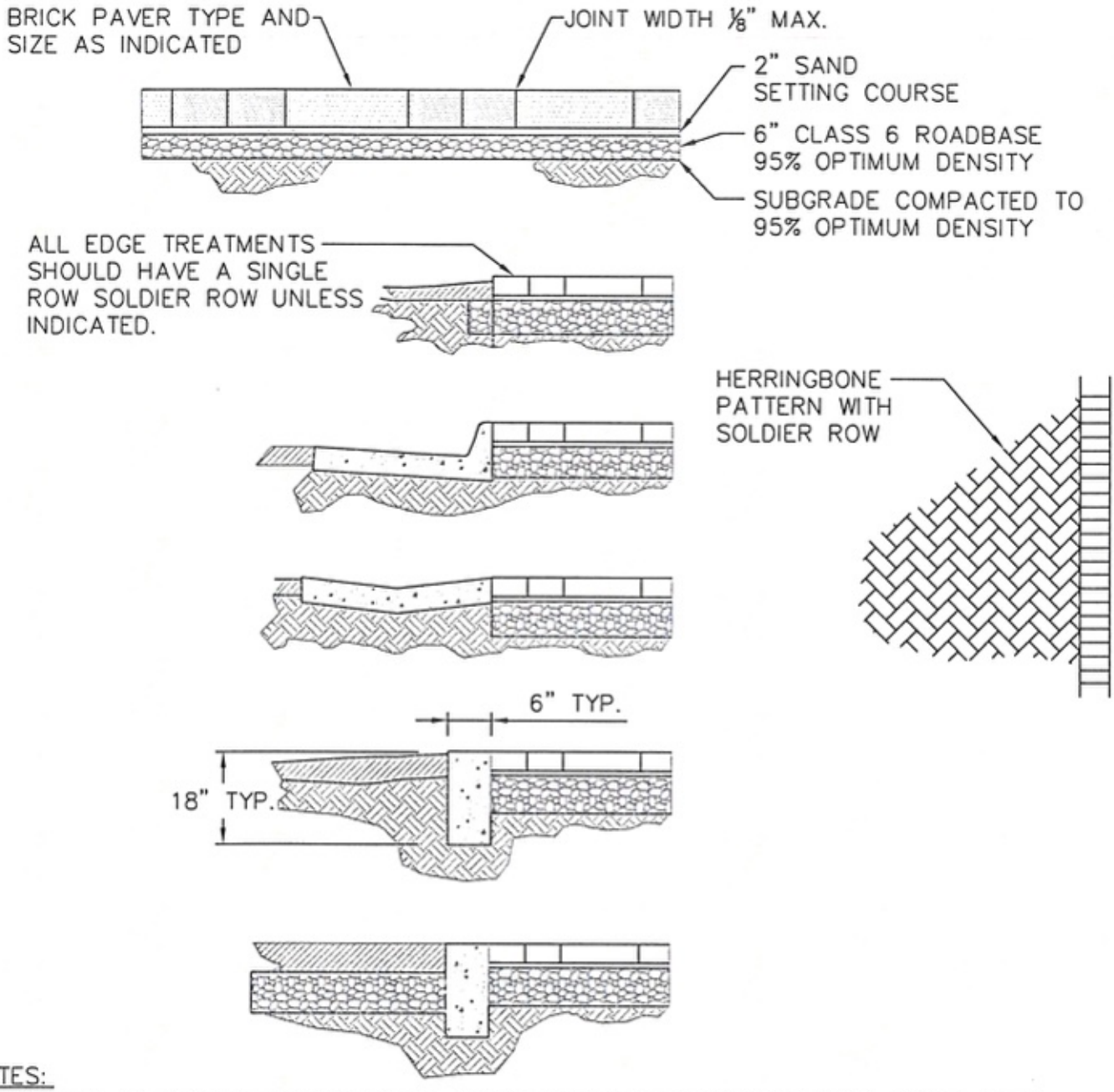

NOTES:

1. MOLDED PLASTIC EDGE RESTRAINT. SPIKE WITH 12" STAINLESS STEEL NAILS AT 2' INTERVALS FOR DRIVES. DECREASE INTERVAL AS NEEDED TO HOLD DESIRED LINE.
2. CONCRETE EDGE TREATMENTS INCLUDE CURB AND GUTTER, GUTTER PAN AND CONCRETE BANDS. CONCRETE SHALL BE REINFORCED WITH FIBROUS CONCRETE REINFORCING AT THE RATE OF 1.5 LB/CY.
3. PAVERS, ASPHALT OR OTHER HARD PAVING SURFACES SHALL BE FLUSH WITH THE TOP OF CONCRETE EDGES. PLATING AND GRASS AREAS SHALL BE 1" BELOW TOP OF CONCRETE EDGES.
4. BASE AND SUBGRADE COMPACTION TO BE 95% OPTIMUM DENSITY.
5. UNIT PAVERS AND EDGE TREATMENTS SHALL BE APPROVED BY THE TOWN'S PUBLIC WORKS DEPARTMENT PRIOR TO INSTALLATION.
6. TRAFFIC LOADS TO BE VERIFIED BY THE TOWN ENGINEER. LOADINGS SHALL DICTATE PAVER THICKNESS TO BE INSTALLED.

PAVING & UNIT PAVER INSTALLATION DETAILS	ST-124	DATE: *1/17/07*
	SCALE: *NTS*	

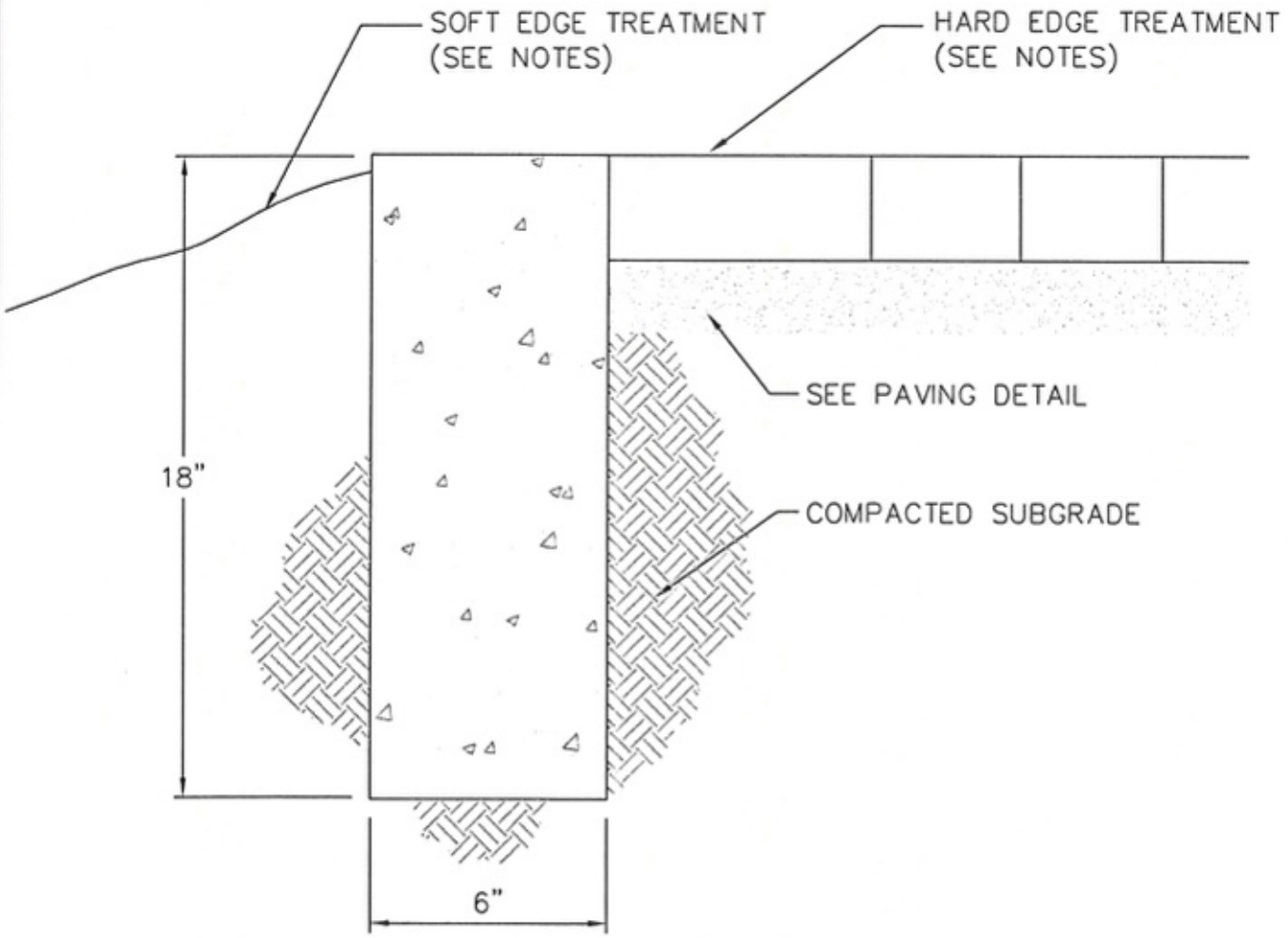

NOTES:

1. HARD EDGE TREATMENTS MAY INCLUDE ASPHALT, CONCRETE, UNIT PAVERS, OR OTHER SUCH PAVING MATERIALS. UNLESS OTHERWISE INDICATED, EDGES SHOULD BE FLUSH WITH TOP OF CONCRETE BAND.
2. SOFT EDGE TREATMENTS MAY INCLUDE GRASS, MULCH, PLANTING AREAS, ETC., AND SHOULD COME TO WITHIN ONE INCH (1") OF THE TOP OF THE CONCRETE BAND UNLESS OTHERWISE INDICATED.
3. CONCRETE SHALL BE FIBERMESH CLASS 4000 CONFORMING WITH WPWSS SECTION 03304, PART 2.08.

CONCRETE BAND PAVING DETAILS	ST-125	DATE: *1/17/07*
	SCALE: *NTS*	

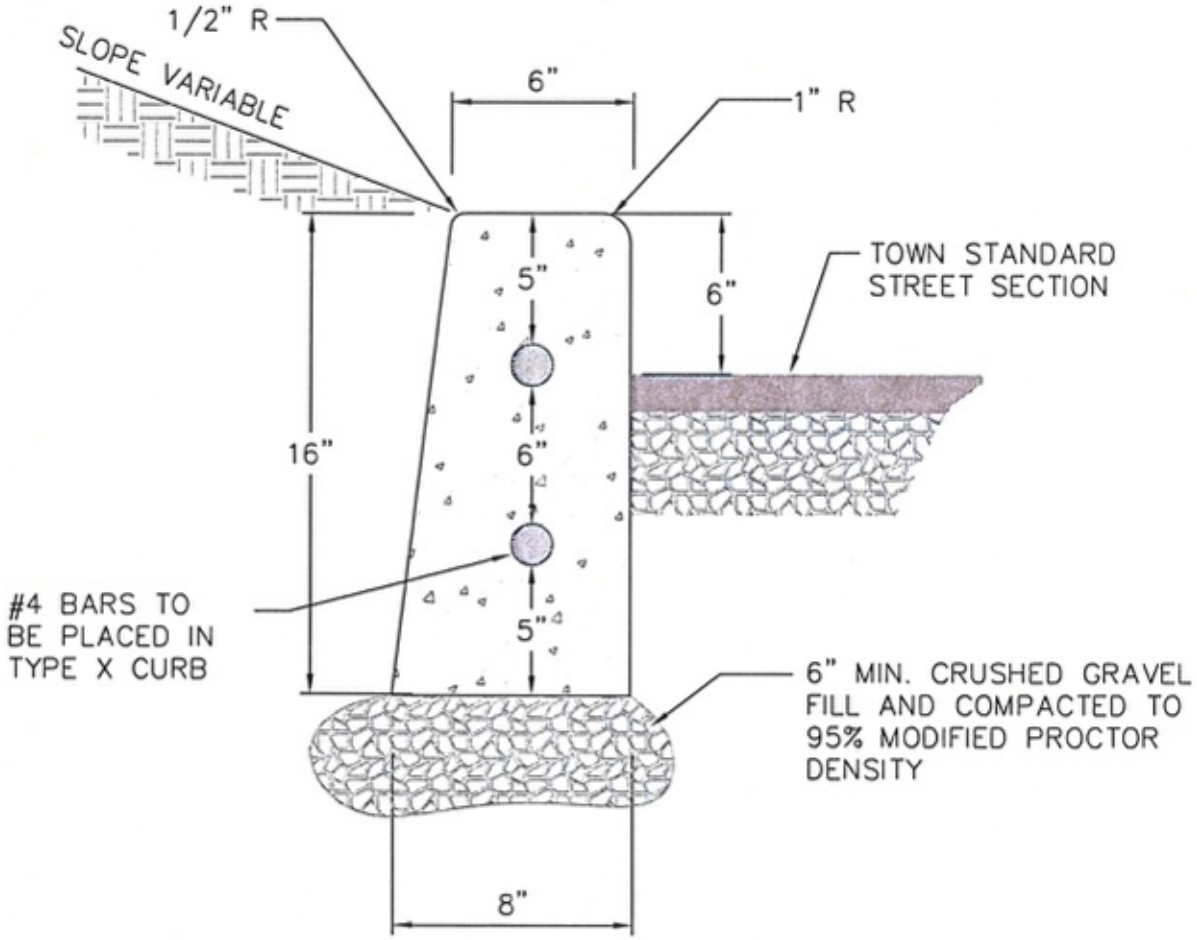

NOTES:

1. CURBS SHALL CONFORM TO WPWSS SECTION 02525, EXCEPT THAT PORTLAND CEMENT CONCRETE SHALL BE FIBERMESH-REINFORCED CLASS 4000 CONCRETE CONFORMING WITH WPWSS SECTION 03304, PART 2.07.
2. AGGREGATE BASE COURSE SHALL BE SIX INCH MINIMUM THICKNESS, CONFORM TO WPWSS SECTION 02190, PART 2.03, GRADING H, AND BE INSTALLED PER WPWSS SECTION 02231, PART 3.03.
3. REMOVAL AND REPLACEMENT OF CURB SHALL TAKE PLACE IN FULL PANELS.

TOWN OF JACKSON WYOMING	*TYPE X CURB*	ST-126 DATE: *1/17/07*
		SCALE: *NTS*

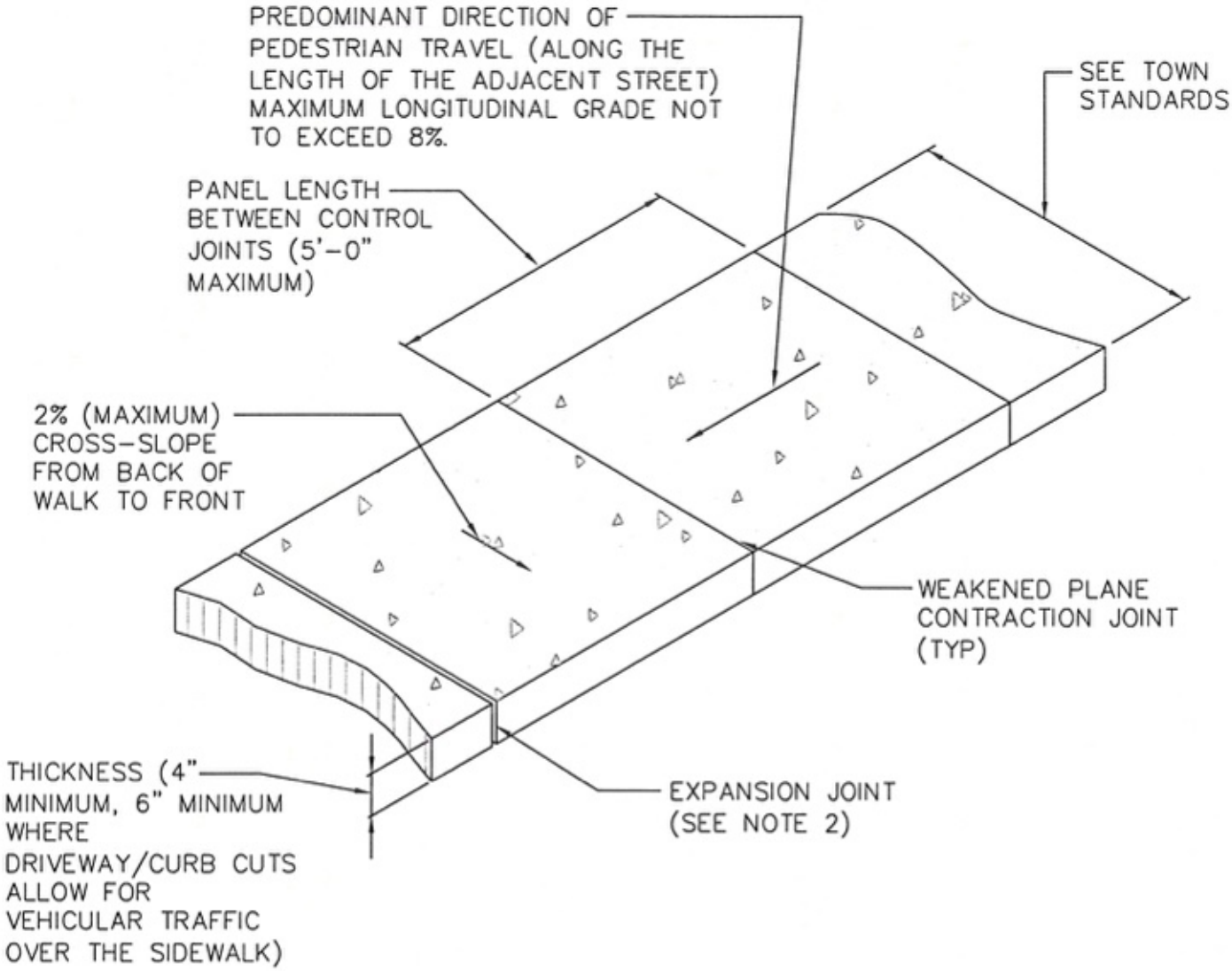

NOTES:

1. SIDEWALK SHALL CONFORM TO ALL APPLICABLE ADA STANDARD REQUIREMENTS SIDEWALKS SHALL CONFORM TO WPWSS SECTION 02776, EXCEPT THAT PORTLAND CEMENT CONCRETE SHALL BE FIBERMESH-REINFORCED CLASS 4000 CONCRETE CONFORMING WITH WPWSS SECTION 03304, PART 2.07.
2. EXPANSION JOINTS SHALL BE PLACED IN SIDEWALK AT THE SAME LOCATIONS AS THOSE IN CURB AND GUTTER WHEN SIDEWALK IS ADJACENT TO CURB. (PER WPWSS SECTION 03251, PART 3.04 SPACING SHALL NOT EXCEED 32'-0" ON CENTER.)
3. FOR SIDEWALKS GREATER THAN SIX FEET IN WIDTH, A LONGITUDINAL CONTROL JOINT SHALL BE INSTALLED AT THE CENTER OF THE WALK.
4. REMOVAL AND REPLACEMENT OF SIDEWALK SHALL TAKE PLACE IN FULL PANELS.
5. AGGREGATE BASE COURSE SHALL BE FOUR INCH MINIMUM THICKNESS, CONFORM TO WPWSS SECTION 02190, PART 2.03, GRADING H, AND BE INSTALLED PER WPWSS SECTION 02231, PART 3.03.

TOWN OF JACKSON WYOMING	*CONCRETE SIDEWALK*	ST-127 DATE: *1/17/07*
		SCALE: *NTS*

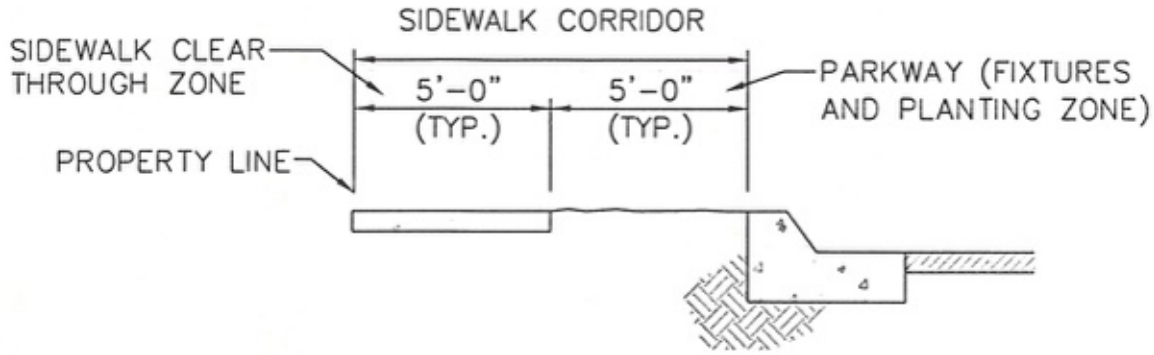

DETACHED SIDEWALK
(SEE NOTE 5)

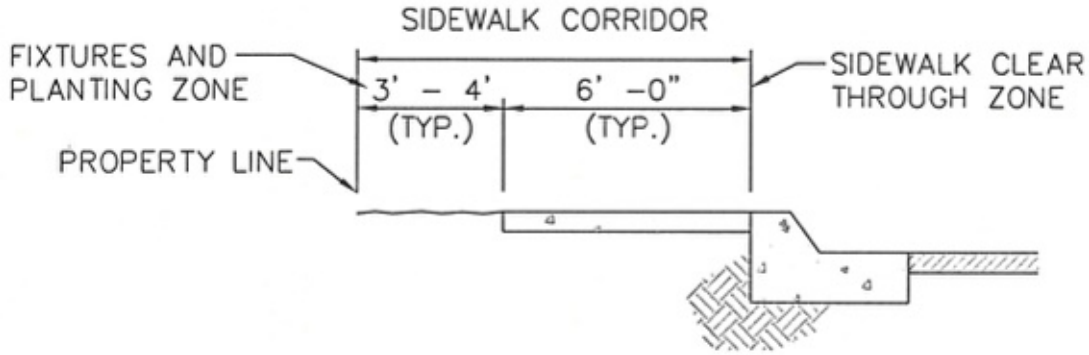

ATTACHED SIDEWALK
(NON-COMMERCIAL STREETS)
(SEE NOTE 4)

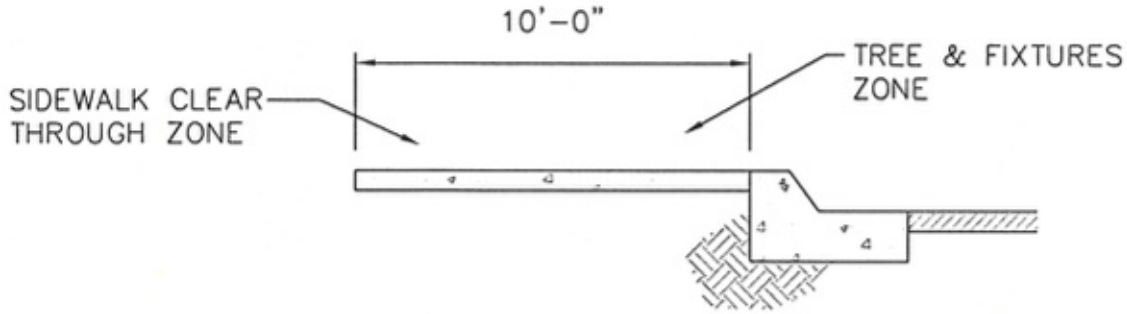

ATTACHED SIDEWALK
(COMMERCIAL STREETS)

NOTES:

1. SIDEWALKS SHALL CONFORM TO ALL APPLICABLE ADA STANDARD REQUIREMENTS
2. SIDEWALK CONSTRUCTION SHALL BE PER TOWN STANDARDS
3. WITHIN THE TOWN'S BOARDWALK DISTRICT, BOARDWALK (RATHER THAN SIDEWALK) SHALL BE INSTALLED.
4. MINIMUM CLEARANCE AROUND ALL OBSTRUCTIONS SHALL BE 5'-0".
5. ON NON-COMMERCIAL STREETS DETACHED SIDEWALK SHALL BE THE PREFERRED OPTION.
6. IN ORDER TO MAINTAIN THE CLEAR THROUGH ZONE, THE FIXTURES ZONE SHALL BE WHERE FIRE HYDRANTS, UTILITY POLES, GUY WIRES, PULL BOXES, NEWSPAPER BOXES, PHONE BOOTHS, AND OTHER SUCH OBSTRUCTIONS ARE LOCATED.

TOWN OF JACKSON WYOMING	*SIDEWALK COORIDOR*	ST-128 DATE: *1/17/07*
		SCALE: *NTS*

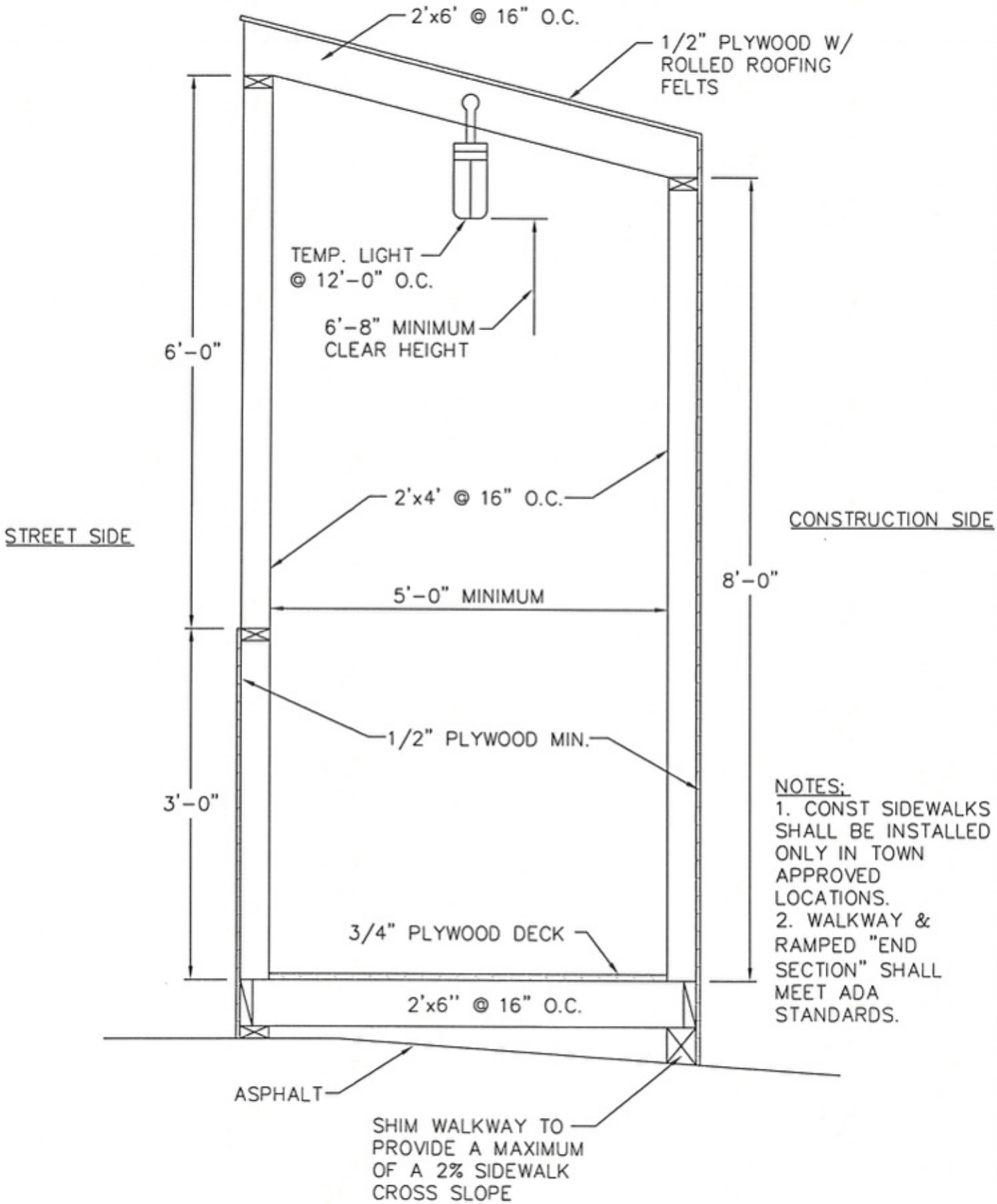

NOTES:
1. CONST SIDEWALKS SHALL BE INSTALLED ONLY IN TOWN APPROVED LOCATIONS.
2. WALKWAY & RAMPED "END SECTION" SHALL MEET ADA STANDARDS.

TEMPORARY CONSTRUCTION SIDEWALK

ST-129 DATE: *1/17/07*

SCALE: *NTS*

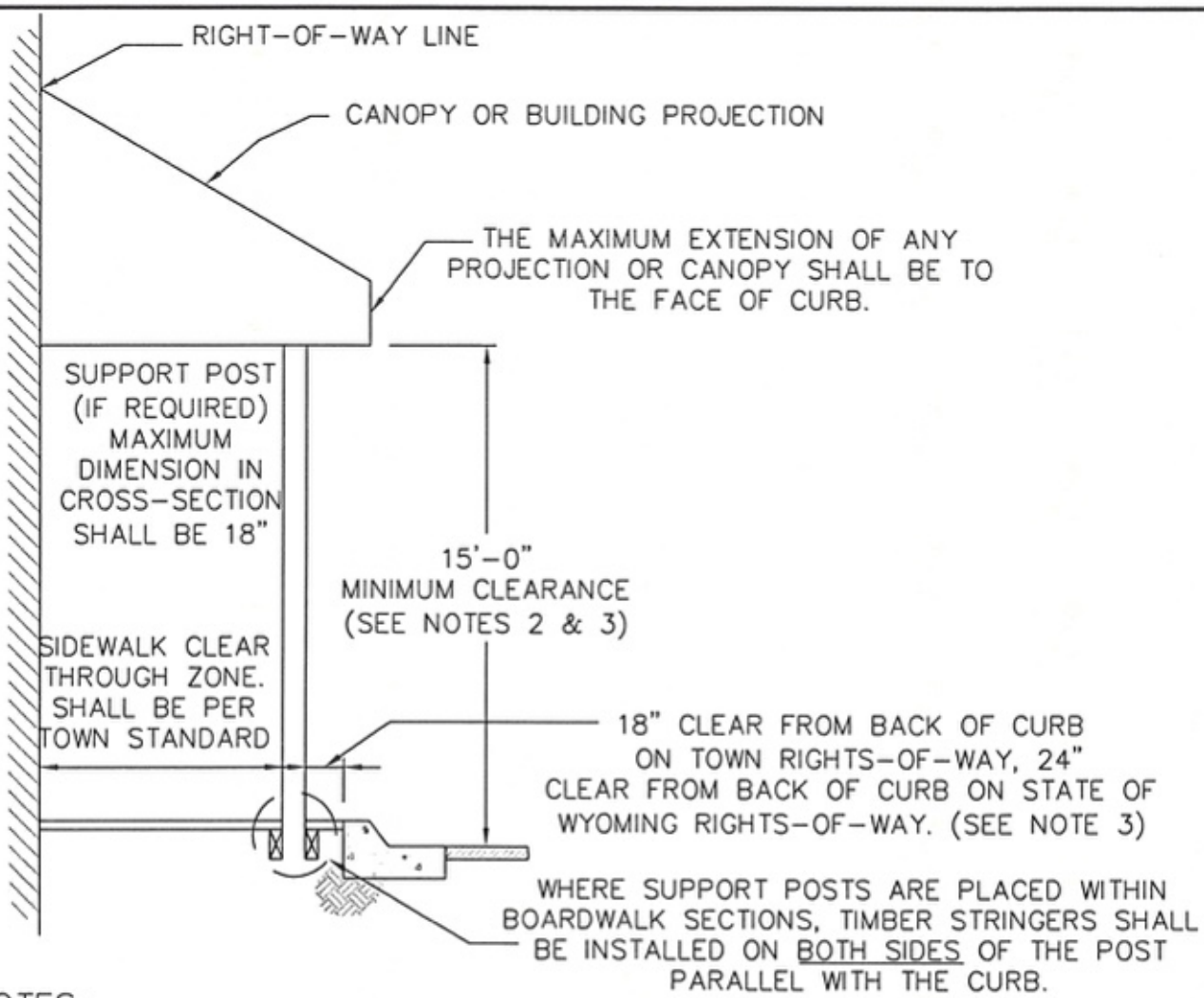

NOTES:

1. AN ENCROACHMENT AGREEMENT EXCUTED BY THE TOWN AND THE PRIVATE PROPERTY OWNER IS REQUIRED TO VEST ANY RIGHTS TO AN ENCROACHMENT INTO A TOWN RIGHT-OF-WAY OR EASMENT.

2. THE REQUIRED 15'-0" CLEARANCE IS PROVIDED TO AVOID CONFLICT WITH THE EQUIPMENT UTLIZED TO CLEAR THE GUTTER OF ICE IN THE WINTER. (HEIGHT OF TOP OF MIRROR ON ROAD GRADER EQUALS 10'.)

3. A CANOPY OR BUILDING PROJECTION HELD BACK FROM THE BACK OF THE CURB CONSISTENT WITH THE REQUIREMENTS FOR POST IS NOT REQUIRED TO ALSO MAINTAIN THE MINIMUM 15'-0" HEIGHT CLEARANCE.

4. WHEREVER POSSIBLE, CANOPIES AND SUPPORT POSTS SHALL ALIGN WITH THOSE ON ADJACENT BUILDINGS.

5. WHERE THE MINIMUM HORIZONAL CLEARANCES SET FORTH IN THIS STANDARD CANNOT BE ACHIEVED, CANOPIES SHALL BE CANTILEVERED OR OTHERWISE SUPPORTED WITHOUT POSTS.

6. A CATILEVERED CANOPY MY BE REQUIRED BY THE TOWN. THE DESIGN OF THIS OVERHANG SHALL BE APPOVED BY THE PUBLIC WORKS DEPARTMENT AND BUILDING OFFICIAL.

CONOPIES INTO THE PUBLIC RIGHT-OF-WAY	ST-130	DATE: *1/17/07*
	SCALE: *NTS*	

Water Details

2008

W-100….Water Main and Service Line Trench

W-101….Fire Hydrant Assembly

W-102….1" Service Line Connection

W-103….Service Connection Thaw Wire 1 of 2

W-104….Service Connection Thaw Wire 2 of 2

W-105….1 ½" and 2" Diameter Steel Water Service

W-106….Water Valve Collar Assembly

W-107….Water Tee and Cross Assembly

W-108….2" Blow-Off Assembly

W-109….Water Pipe Anchor Block

W-110….Fire Line with Water Service

W-111….Thrust Block Details

W-112….Water Meter Installation (¾" & 1" Meter, Interior Installation)

W-113….Water Meter Installation (1 ½" & Larger Meters, Interior…)

W-114….Water Meter Pit (¾" & 1" Services, Outdoor Installation)

W-115….Water Meter Pit (Large Diameter Services)

W-116….Water Pipe Insulation

W-117….Air Valve / Vac Manhole

W-118….Water Main Tapping Detail

W-119….In Line Water Valve

WATER MAINS TESTING STANDARDS

WATER MAINS SHALL BE SUBJECTED TO AND PASS CERTAIN PERFORMANCE TESTS PRIOR TO THEIR ACCEPTANCE BY THE TOWN OF JACKSON. SUCH TESTS SHALL BE CONDUCTED IN THE PRESENCE OF AUTHORIZED TOWN OF JACKSON STAFF. ANY REMEDY OF DEFECTS SHALL BE CARRIED OUT AT THE EXPENSE OF THE CONTRACTOR.

HYDROSTATIC TESTING

THE FOLLOWING TESTS SHALL BE PERFORMED:

1. PRESSURE TEST

AFTER THE PIPE HAS BEEN LAID, WATER PIPE AND VALVES SHALL BE SUBJECTED TO A HYDROSTATIC PRESSURE OF AT LEAST 1.5 X THE WORKING PRESSURE AT THE POINT OF TESTING, OR A MINIMUM OF 125 PSI (862.5 KPA), WHICHEVER IS GREATER. HYDROSTATIC TESTING SHALL INCLUDE WATER MAIN, ALL VALVES AND ALL SERVICE LINE CONNECTIONS FROM THE POINT OF CONNECTION AT THE MAIN TO THE CURB STOP.

A. TEST PRESSURE RESTRICTIONS - TEST PRESSURES SHALL:

1) NOT BE LESS THAN *1.25* X THE WORKING PRESSURE AT THE HIGHEST POINT ALONG THE TEST SECTION.
2) NOT EXCEED PIPE OR THRUST RESTRAINT DESIGN PRESSURES.
3) BE OF AT LEAST TWO-HOUR DURATION.
4) NOT VARY BY MORE THAN + 5 PSI (34.5 KPA).
5) NOT EXCEED THE RATED PRESSURE OF THE VALVE OR HYDRANTS.

B. PRESSURIZATION:

EACH VALVED SECTION OF PIPE SHALL BE FILLED WITH WATER SLOWLY AND THE SPECIFIED TEST PRESSURE, BASED ON THE ELEVATION OF THE LOWEST POINT OF THE LINE OR SECTION UNDER TEST AND CORRECTED TO THE ELEVATION OF THE TEST GAUGE, SHALL BE APPLIED BY MEANS OF A PUMP CONNECTED TO THE PIPE IN A MANNER SATISFACTORY TO THE TOWN.

C. AIR REMOVAL:

BEFORE APPLYING THE SPECIFIED TEST PRESSURE, AIR

SHALL BE EXPELLED COMPLETELY FROM THE PIPE, VALVES, AND HYDRANTS. IF PERMANENT AIR VENTS ARE NOT LOCATED AT ALL HIGH POINTS, THE CONTRACTOR SHALL INSTALL CORPORATION COCKS AT SUCH POINTS SO THAT THE AIR CAN BE EXPELLED AS THE LINE IS FILLED WITH WATER. AFTER ALL THE AIR HAS BEEN EXPELLED, THE CORPORATION COCKS SHALL BE CLOSED AND THE TEST PRESSURE APPLIED. AT THE CONCLUSION OF THE PRESSURE TEST, THE CORPORATION COCKS SHALL BE REMOVED AND PLUGGED, OR LEFT IN PLACE AT THE DISCRETION OF THE OWNER.

D. EXAMINATION:

ALL EXPOSED PIPE, FITTINGS, VALVES, HYDRANTS, AND JOINTS SHALL BE EXAMINED CAREFULLY DURING THE TEST. ANY DAMAGE OR DEFECTIVE PIPE, FITTINGS, VALVES, OR HYDRANTS THAT ARE DISCOVERED FOLLOWING THE PRESSURE TEST SHALL BE REPAIRED OR REPLACED. ONCE SYSTEM IMPROVEMENTS ARE COMPLETED, THE TEST SHALL BE REPEATED UNTIL IT IS SATISFACTORY TO THE OWNER.

BACKFLOW SYSTEM

ALL NEW INSTALLATIONS WHICH CONNECT TO THE TOWN WATER SYSTEM SHALL MEET OR EXCEED THE AWWA REQUIRMENTS REGARDING CROSS CONNECTION CONTROL. PRIOR TO ACCEPTANCE OF ANY NEW INSTALLATION THE TOWN SHALL INSPECT THE BACKFLOW SYSTEM TO ENSURE PROPER OPERATION. DOUBLE CHECK VALVES AND REDUCED PRESUURE BACKFLOW PREVENTERS SHALL BE INSPECTED ANNUALLY WITH AN INSPECTION CERTIFICATION BEING SENT TO THE TOWN PUBLIC WORKS DEPARTMENT. ALL INSTALLATIONS AND INSPECTIONS SHALL BE COMPLETED AT THE SOLE EXPENSE OF THE OWNER OF THE FACILITY.

STANDARD TOWN WATER SYSTEM MATERIALS

THE FOLLOWING IS A LIST OF TOWN STANDARD PARTS, WHICH ARE TO BE USED IN COMPLETING WATER IMPROVEMENT PROJECTS WHICH ARE PART OF, OR CONNECTED TO, THE TOWNS WATER SYSTEM.

Water Mains

Ductile iron pipe shall conform to the provisions of AWWA Specifications C-151 pressure class 350. Pipe joints shall be "Push-On" joints conforming to AWWA Specifications C-111.

Fire Hydrants

Hydrants shall be Waterous Pacer Model WB-67-250 and shall conform to dry barrel fire hydrant, AWWA C-250. Hydrants shall furnished with 5 ¼" minimum valve openings, one 4 1/2" pumper connection and two 2 ½" hose connections. Nozzle threads shall conform to the National Fire Protection Association for National Standard Fire Hose Coupling Screw Threads.

Main Line Valves

All gate valves shall be resilient seated gate valves with iron body and non-rising stems with design, construction, and pressure rating conforming to AWWA C509 or C515 with the additional requirement that the design operating pressure for all sizes shall be 200 psi minimum. All valves shall be "right hand closed".
Stem seals shall be double "O" ring seals designed so that the seal above the stem collar can be replaced with the valve under pressure in full open position.
The resilient seated gate valves' interior parts and surfaces shall be coated in accordance with AWWA C550.
All valve metal accessory items shall be low alloy steel. Stainless Steel all-thread J-bolts utilized as thrust block anchorage shall be 1/2" commercial grade SS316 with a minimum tensile strength of 100,000 psi.

Valve Boxes

Shall be cast iron, 5 1/4" diameter adjustable valve boxes. Valve boxes shall be a "Tylor" screw type and of sufficient length for the pipe bury as specified. The cast iron cover of the valve box shall have the word "Water" stamped thereon.

Corp-Stops

All corp-stop valves shall be a Mueller CC thread H-15028 Ground Key Corporation Stop, or approved equal. Minimum valve inlet and outlet connection size shall be at full size, as called out. The corporation stop shall conform in all regards to AWWA C-800 as a taped thread.

Curb-Stops

¾" to 2" curb Stop. Valve shall be a Mueller Minneapolis pattern H-10287 or approved equal. Supply each valve with two Mueller H-15428 MIP by compression connectors when used with copper service pipe (CTS size

adaptation may be required). The minimum size opening within the plug shall be full diameter of the service line. The curb stop shall conform in all regards to AWWA C-800.

Curb Valve Box and Lid

Curb boxes shall consist of a 1 1/2" galvanized steel pipe lower section and a 2" galvanized steel pipe telescoping upper section. Screw the 1 1/2" lower section onto the Minneapolis top threads of the curb stop using a galvanized steel coupling or bell reducer. Supply and install a Mueller cap, or approved equal, stamped "Water" with a pentagon head plug on the top of the 2" upper section pipe. Do not install a shutoff rod inside the curb box.

Type of pipe between Corp and Curb Stop (3/4" & 1")

Service Pipe shall be Type K soft copper conforming to Federal Specification WW-T-799 or ASTM B88-62.

Type of pipe between Corp and Curb Stop (1 ½" & 2")

Domestic galvanized schedule 40 or better.

Thaw Cable

4.0 Copper Shielded Cable

Tapping Saddles (Service Line)

Service saddles for service connections shall be a Smith Blair 317, or approved equal, ductile iron service saddle with double stainless steel straps, stainless steel stud bolts, nuts and washers, and Flexi-blue epoxy coating. Female threads within the saddle boss for insertion of the corporation stop shall be CC thread.

Main Line Live taps

All tapping 4" or greater shall be competed by Town staff. All other Town taps shall be pre-approved by the Town Public Works Department. Tapping sleeves shall be stainless steel wrap around with flange fitting for tapping valve. Both valve and sleeve need to meet working pressure of 200 psi and not exceed 300 psi with grade 60 gaskets or better.

Main Line Couplings

Couplings "Dressler Couplings" for making connections to like-sized, or nearly like-sized, existing lines shall be Smith Blair Style 442 Cast Transition Couplings with a 12" sleeve length with a factory-applied Flexi-blue 12-24 mil interior and exterior epoxy coating and stainless steel hardware. Couplings shall meet all requirements of AWWA C219. Supplied couplings shall have the capability of

sliding the assembly completely onto one pipe before bringing the other pipe onto line.

Main Line Fittings

Shall be ductile iron, 350 psi minimum pressure rating, conforming to AWWA C110 or C153. Rubber gaskets shall conform to AWWA C111. Hardware shall be low alloy steel with a minimum yield strength of 45,000 psi.

All fittings shall incorporate a cement mortar interior lining meeting AWWA C104. Solid sleeves supplied under either C110 or C153 shall be of the long-body style.

Water Meters

Water meter assemblies shall be obtained from the Town and shall include a Neptune T-10 meter.

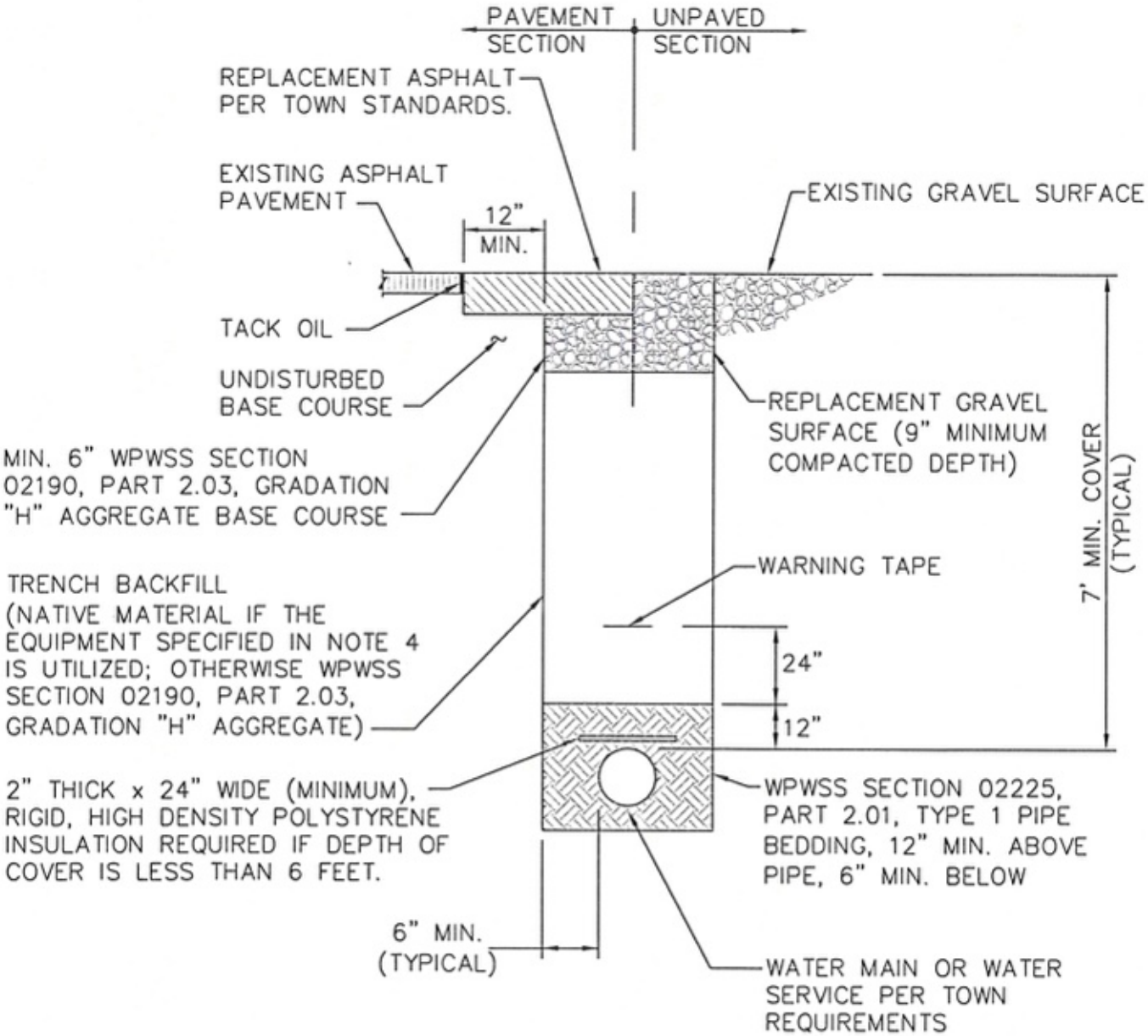

NOTES:

1. TRENCH BACKFILL BELOW THE SURFACE SHALL MEET THE FOLLOWING CRITERIA:
   - 95% MODIFIED PROCTOR DENSITY WITHIN STREET AND ALLEY RIGHTS-OF-WAY.
   - 90% MODIFIED PROCTOR DENSITY OUTSIDE STREET AND ALLEY RIGHTS-OF-WAY.
2. COMPACTION OF TRENCH BACKFILL SHALL BE CARRIED OUT WITH A HOE-PACK OR A SHEEPS FOOT ROLLER.
3. PIPE BEDDING SHALL BE PLACED IN 6" LIFTS AND THOROUGHLY COMPACTED TO PROVIDE UNIFORM PIPE SUPPORT.
4. ALL TRENCH EXCAVATION SHALL CONFORM TO WYOMING OCCUPATIONAL HEALTH AND SAFETY ADMINISTRATION (WYOSHA) REGULATIONS.

WATER MAIN AND SERVICE LINE TRENCH	W-100	DATE: *1/17/07*
	SCALE: *NTS*	

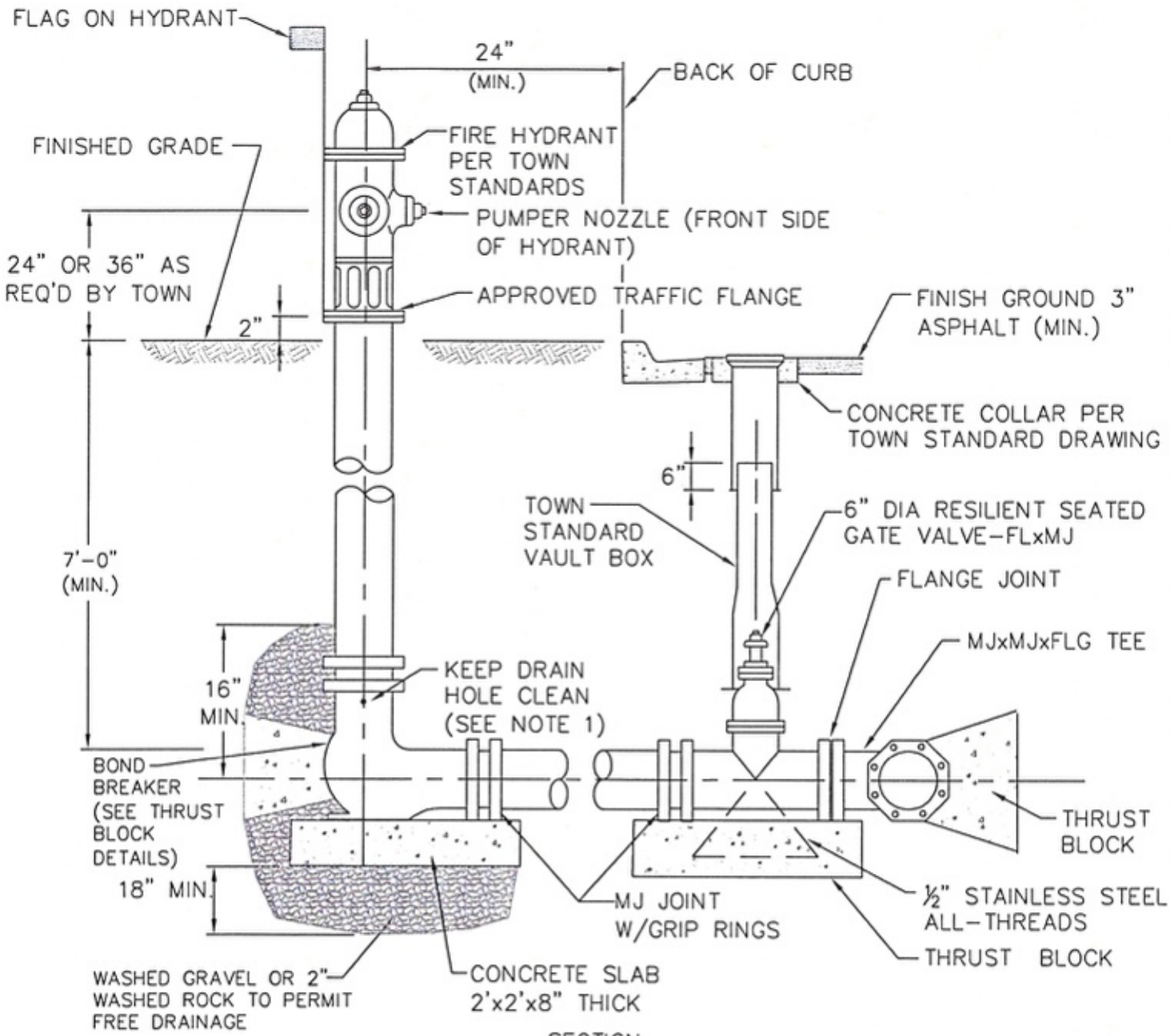

SECTION

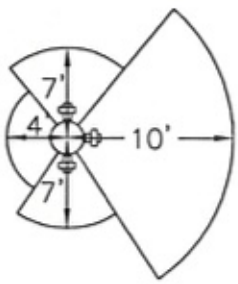

FRONT-10 FEET OF CLEARANCE
SIDES-7 FEET OF CLEARANCE
REAR-4 FEET OF CLEARANCE
ABOVE-20 FEET OF CLEARANCE

HYDRANT CLEARANCE DIAGRAM

NOTES:

1. HYDRANT DRAIN HOLE NOT PERMITTED IF BELOW WATER TABLE.
2. HYDRANT LOCATION TO BE APPROVED BY THE TOWN PRIOR TO INSTALLATION.
3. THERE ARE NO ABOVE GROUND OBSTRUCTIONS ALLOWED IN THE AREAS SHOWN IN THE HYDRANT CLEARANCE DIAGRAM UNLESS APPROVED BY THE TOWN.

TOWN OF JACKSON WYOMING	*FIRE HYDRANT ASSEMBLY*	W-101 DATE: *1/17/07*
		SCALE: *NTS*

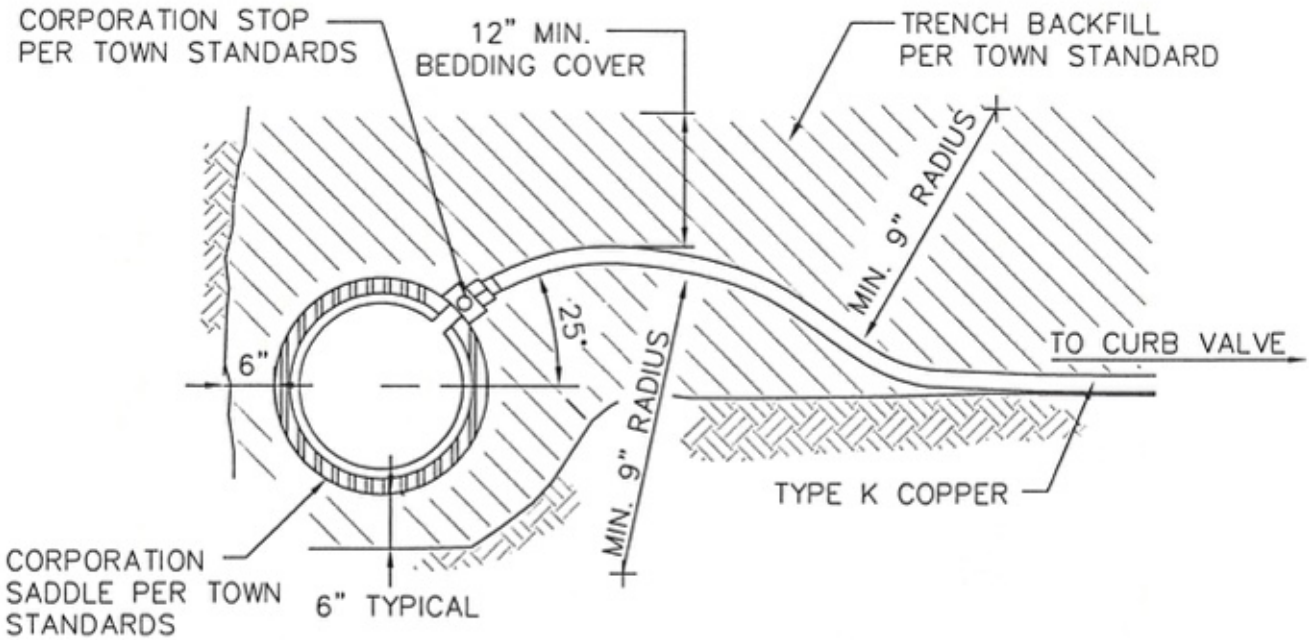

DETAIL OF A PROPERLY INSTALLED CORPORATION STOP, SHOWING GOOSENECK IN SERVICE PIPE.

1" SERVICE LINE CONNECTION	W-102	DATE: *1/17/07*
	SCALE: *NTS*	

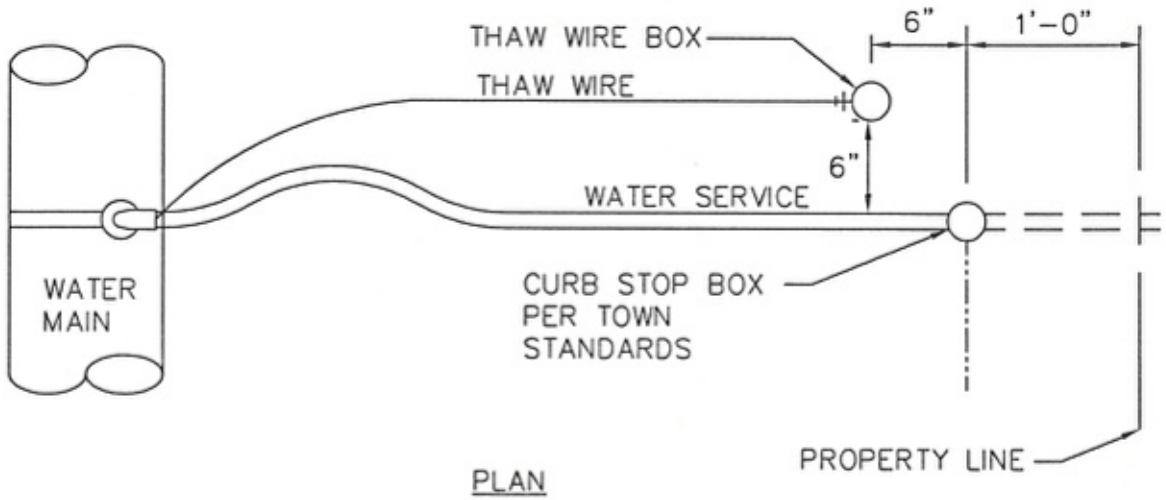

PLAN

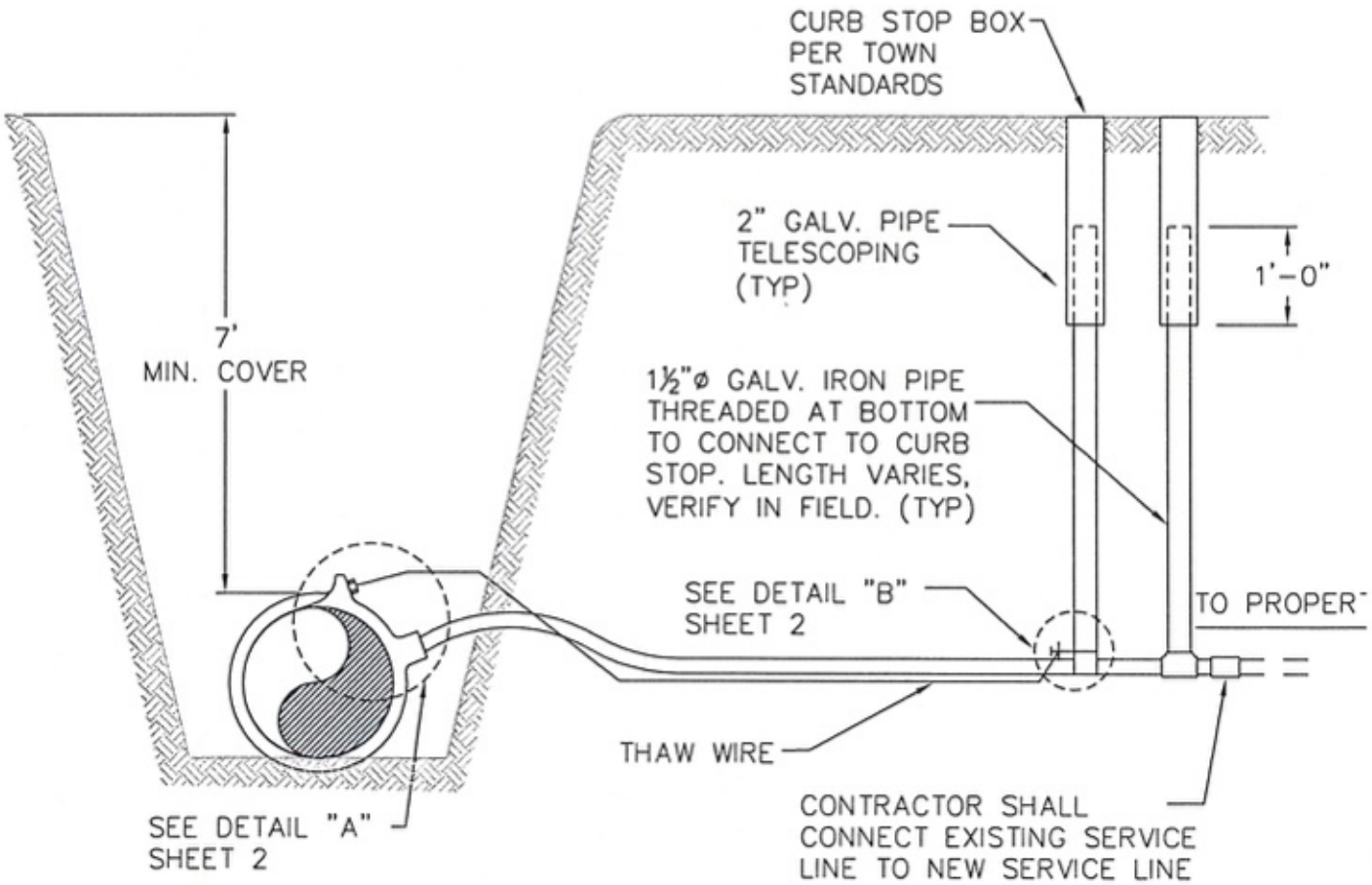

ELEVATION

NOTES:

1. THAW WIRE TO BE INSTALLED ON ALL NEW AND EXISTING WATER SERVICES IN THE TOWN OF JACKSON.

TOWN OF JACKSON WYOMING	*SERVICE CONNECTION THAW WIRE DETAIL 1 OF 2*	W-103 DATE: *1/17/07*
		SCALE: *NTS*

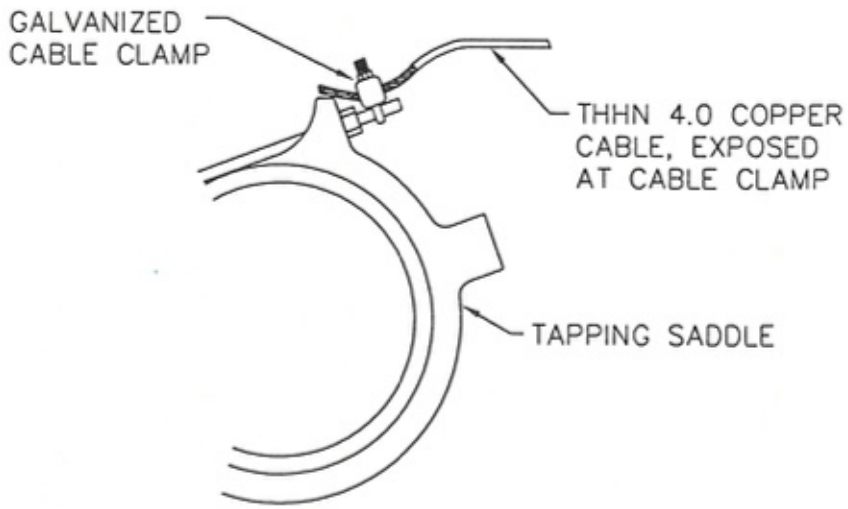

DETAIL "A"

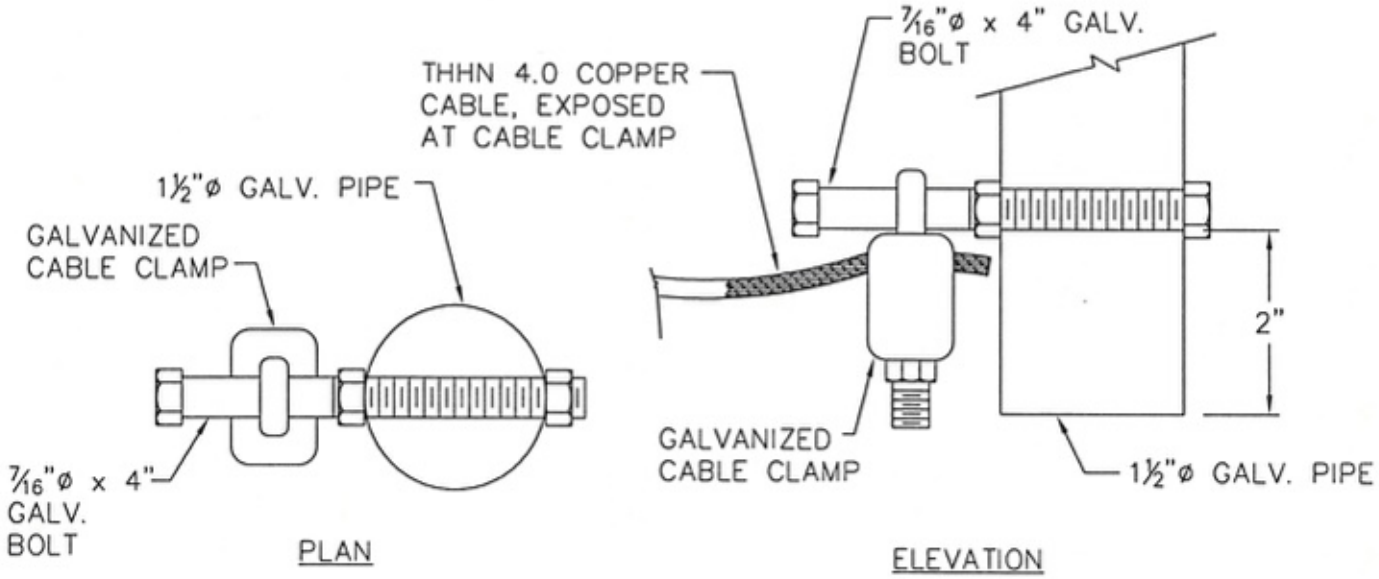

DETAIL "B"

TOWN OF JACKSON WYOMING	*SERVICE CONNECTION THAW WIRE DETAIL 2 OF 2*	W-104 DATE: *1/17/07*
		SCALE: *NTS*

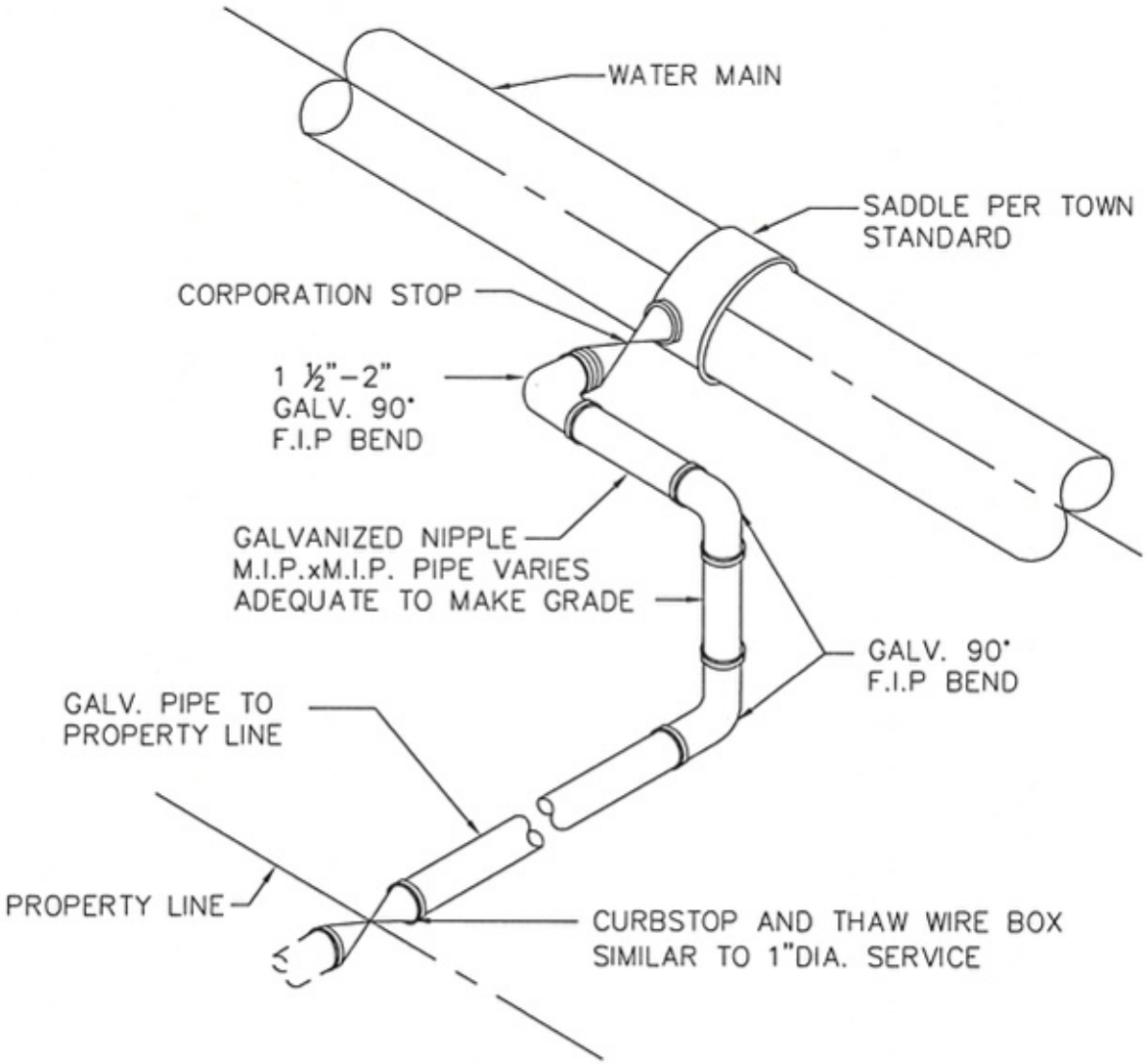

NOTE:
1. THAW WIRE IS REQUIRED ON THIS SERVICE.

1 1/2 AND 2 INCH DIAMETER STEEL WATER SERVICE	W-105	DATE: *1/17/07*
	SCALE: *NTS*	

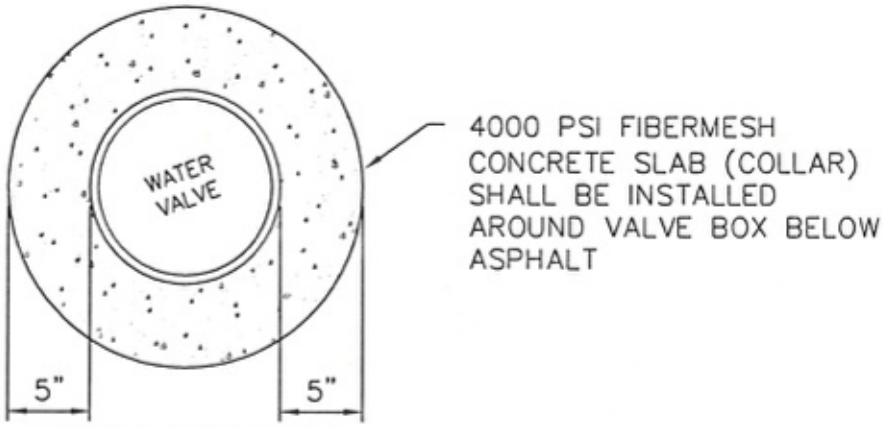

WATER VALVE COVER

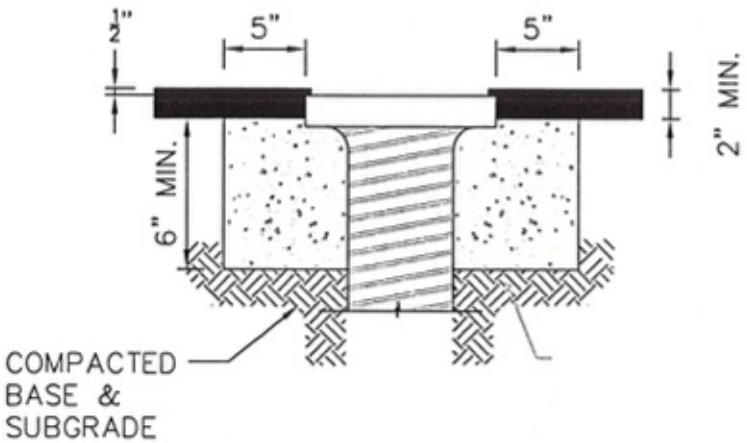

WATER VALVE ADJUSTMENT

NOTES:

1. ADJUST WATER VALVES UPWARD OR DOWNWARD AS REQUIRED. FINAL ADJUSTMENT SHALL BE MADE AFTER PAVING AND BEFORE SEAL COATING.

2. WHEN CONCRETE COLLAR IS POURED ABUTTING CONCRETE PAVEMENT, DEPTH SHOULD EQUAL THAT OF THE CONCRETE SECTION OR 6", WHICHEVER IS GREATER.

TOWN OF JACKSON WYOMING	*WATER VALVE COLLAR ASSEMBLY*	W-106 DATE: *1/17/07*
		SCALE: *NTS*

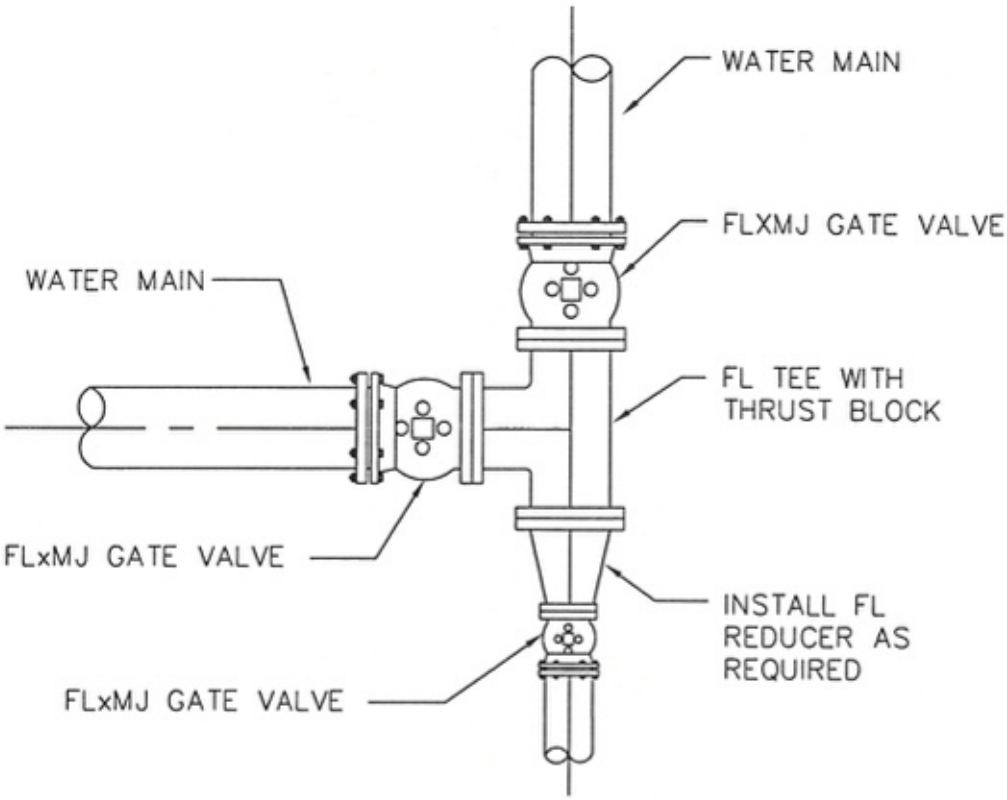

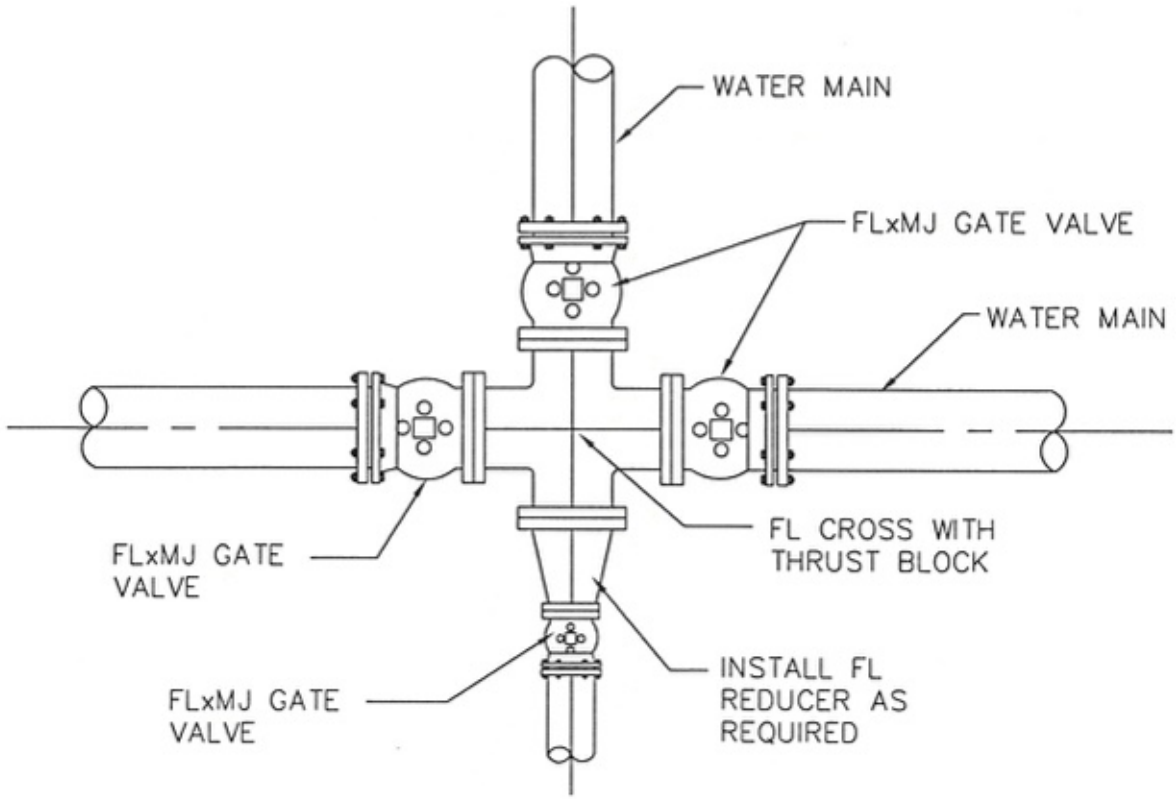

WATER TEE AND CROSS ASSEMBLY	W-107	DATE: *1/17/07*
	SCALE: *NTS*	

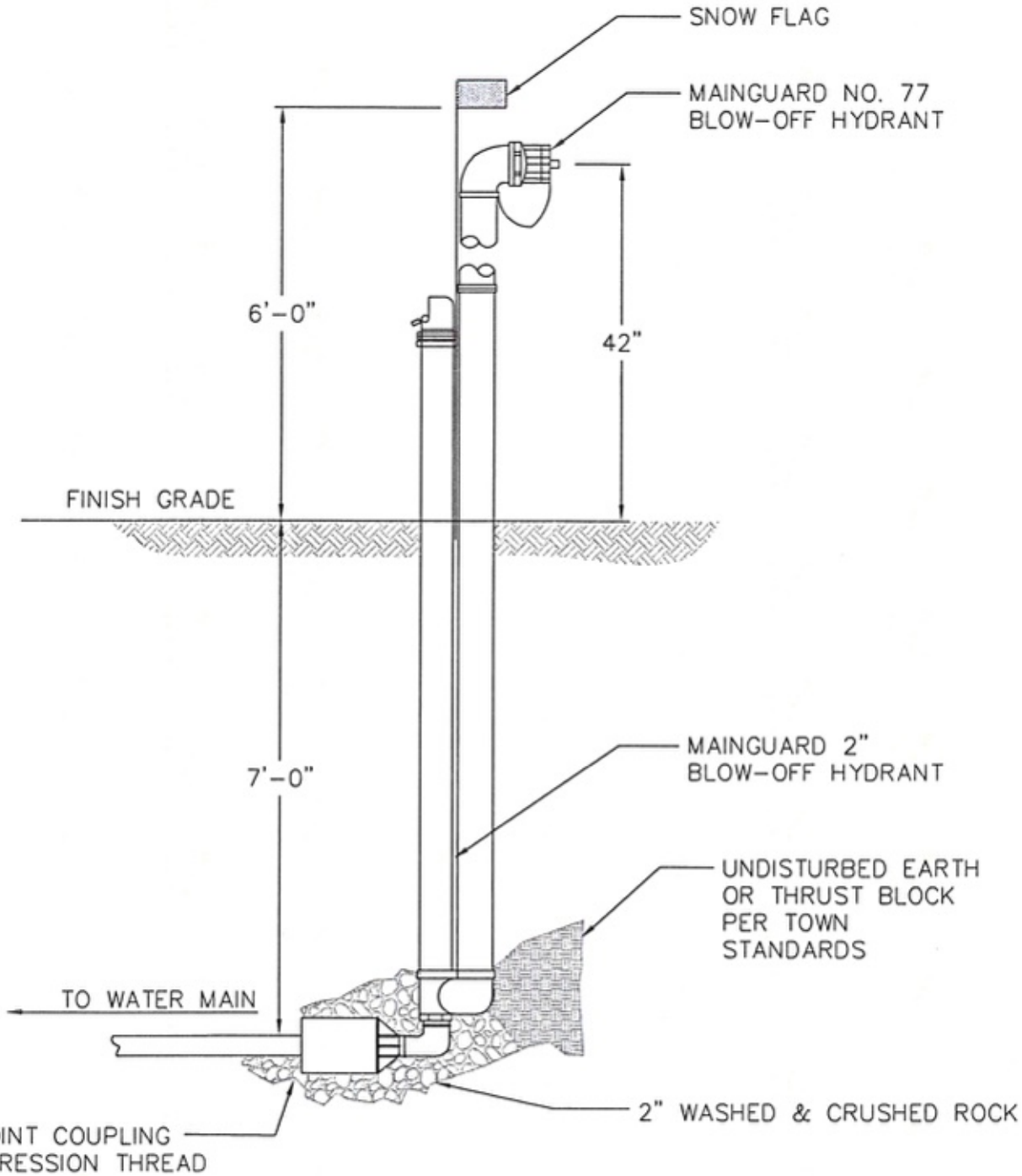

NOTES:

1. PROVIDE STANDARD CURB VALVE AT TOWN APPROVED LOCATION.
2. POST HYDRANTS SHALL BE NON-FREEZING, SELF DRAINING TYPE WITH A 7' BURY. THESE HYDRANTS WILL BE FURNISHED WITH A 2" FIP INLET, A NON-TURNING OPERATING ROD, AND SHALL OPEN TO THE LEFT. ALL OF THE WORKING PARTS SHALL BE OF BRONZE-TO-BRONZE DESIGN, AND BE SERVICEABLE FROM ABOVE GRADE WITH NO DIGGING. THE OUTLET SHALL ALSO BE BRONZE AND BE 2 ½" NST. HYDRANTS SHALL BE LOCKABLE TO PREVENT UNAUTHORIZED USE AS MANUFACTURED BY KUPFERLE FOUNDRY CO., ST. LOUIS, MO, OR APPROVED EQUAL.

2" BLOW-OFF ASSEMBLY	W-108	DATE: *1/17/07*
	SCALE: *NTS*	

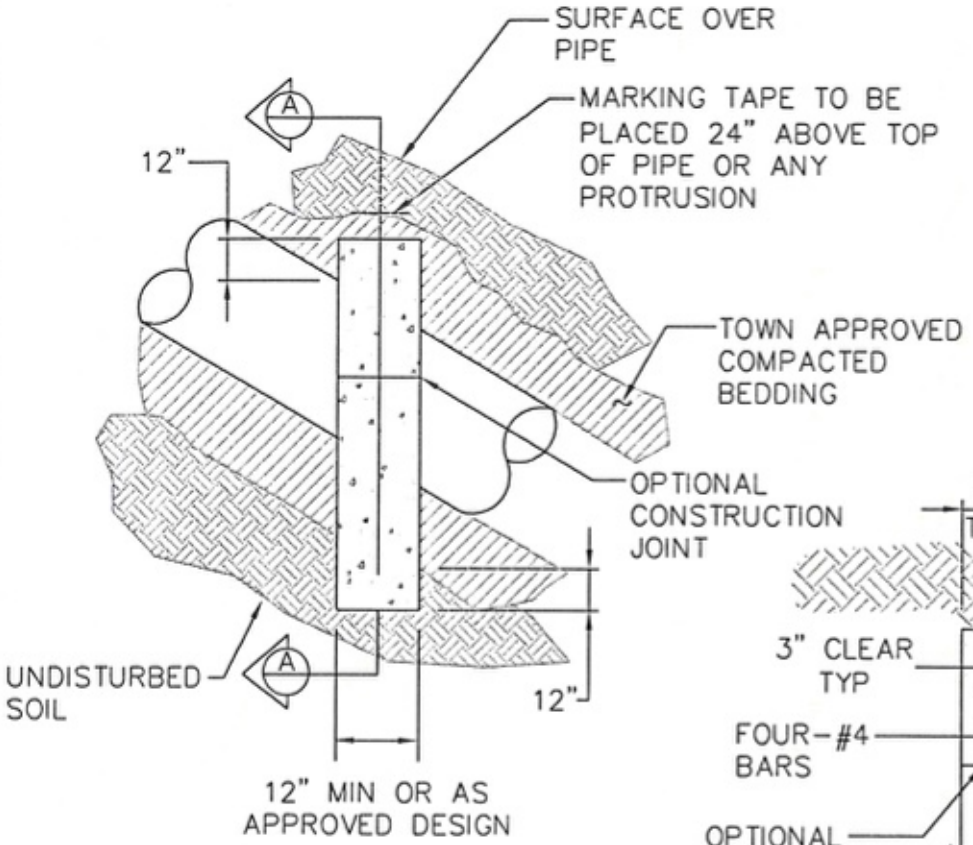

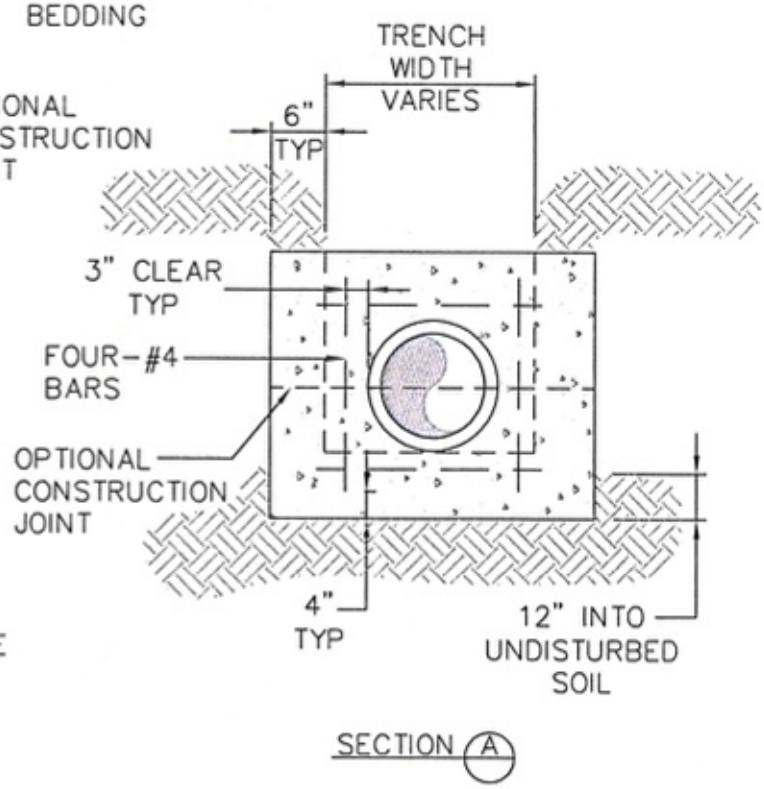

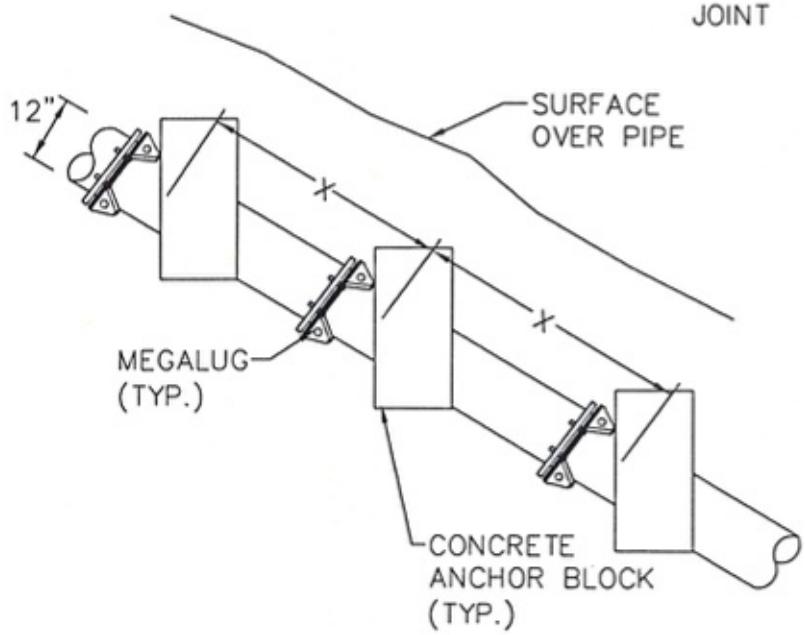

NOTE:

1. DRAINS TO DAYLIGHT ARE TO BE LOCATED ON THE UPHILL SIDE OF CONCRETE BLOCKS.
2. DISTANCE "X" TO BE DETERMINED BY THE ENGINEER AND SUBMITTED TO THE TOWN FOR REVIEW PRIOR TO CONSTRUCTION

WATER PIPE ANCHOR BLOCK	W-109	DATE: *1/17/07*
	SCALE: *NTS*	

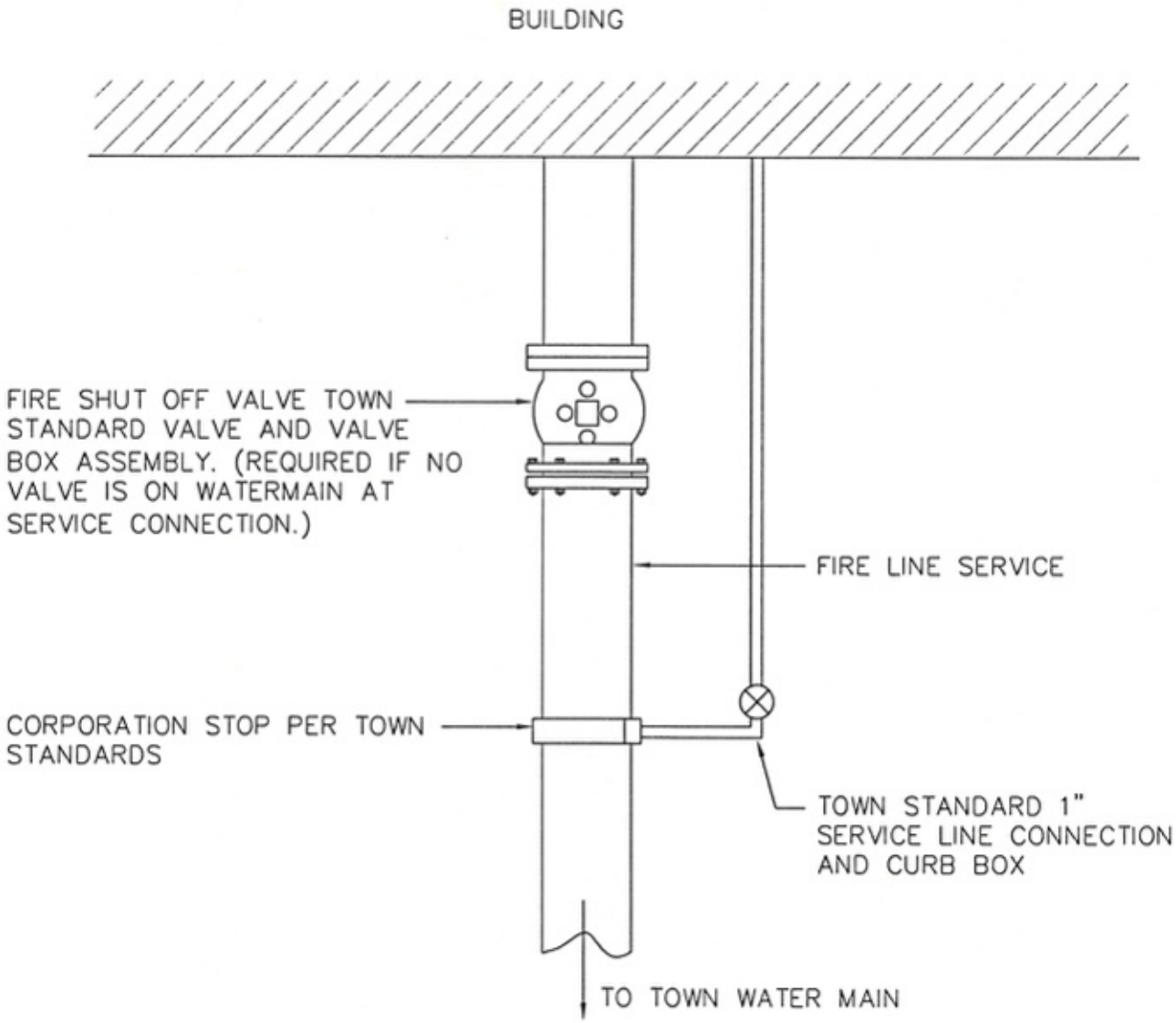

FIRE LINE WITH WATER SERVICE

W-110 DATE: *1/17/07*

SCALE: *NTS*

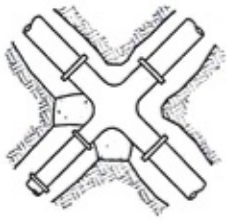

UNBALANCED CROSS

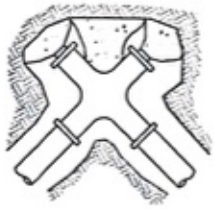

PLUGGED CROSS

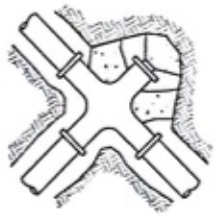

PLUGGED CROSS

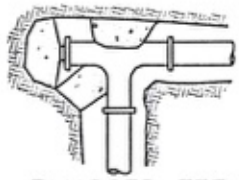

PLUGGED TEE

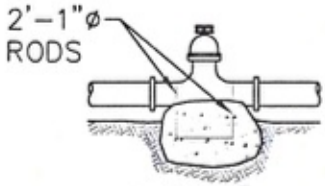

VALVE

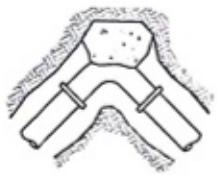

HORIZONTAL BEND

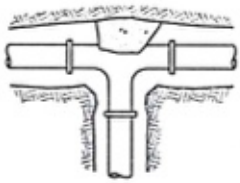

TEE

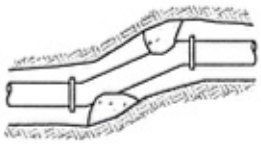

OFFSET

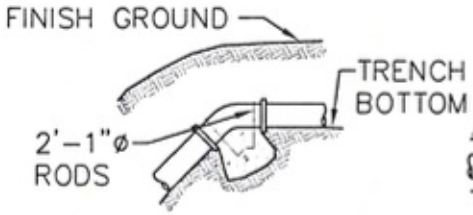

VERTICAL BEND

ENGINEER TO
SPECIFIY CONSTRUCTION

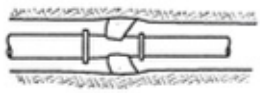

REDUCER

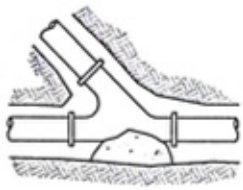

"Y" BRANCH

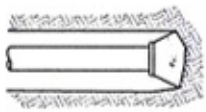

DEAD END

MINIMUM DIMENSIONS FOR THRUST BLOCKING										
FITTING SIZE	TEES & PLUGS		90° BENDS		45° BENDS & WYES		REDUCERS & 22 1/2° BENDS		11 1/4° BENDS	
	A	B	A	B	A	B	A	B	A	B
4"	1'-7"	1'-2"	1'-9"	1'-6"	1'-8"	0'-10"	1'-7"	0'-6"	0'-6"	0'-6"
6"	2'-0"	1'-11"	2'-5"	2'-2"	1'-10"	1'-7"	1'-9"	0'-10"	1'-0"	0'-6"
8"	2'-8"	2'-6"	3'-2"	3'-0"	2'-5"	2'-1"	1'-9"	1'-6"	1'-0"	1'-0"
10"	3'-4"	3'-3"	4'-0"	3'-10"	3'-0"	2'-9"	2'-2"	1'-11"	1'-6"	1'-0"
12"	4'-0"	3'-10"	4'-8"	4'-8"	3'-8"	3'-3"	2'-7"	2'-3"	2'-0"	1'-0"
14"	5'-5"	3'-10"	6'-6"	4'-11"	4'-9"	3'-5"	3'-5"	2'-5"	2'-0"	1'-6"
20"	5'-0"	5'-0"	6'-0"	6'-0"	5'-0"	4'-0"	3'-6"	3'-0"	3'-0"	2'-0"
24"	6'-0"	6'-0"	7'-0"	7'-0"	5'-0"	5'-0"	4'-6"	3'-0"	3'-0"	3'-0"
30"	7'-6"	7'-6"	8'-0"	8'-0"	6'-3"	6'-3"	4'-9"	4'-6"	3'-3"	3'-3"

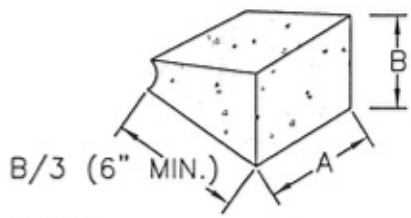

NOTES:

1. SIZE BLOCKS SHALL BE A MINIMUM OF 6" THICK.
2. ALL BLOCKING SHALL BEAR AGAINST UNDISTURBED MATERIAL.
3. DESIGN IS BASED ON 150 PSI MAIN PRESSURE AND 2000 PSF SOIL BEARING CAPACITY.
4. 4 MIL POLYETHELENE PLASTIC BOND BREAKER SHALL BE PROVIDED BETWEEN THRUST BLOCK AND WATER PIPE.

TOWN OF JACKSON WYOMING

THRUST BLOCK DETAILS

W-111 DATE: *1/17/07*

SCALE: *NTS*

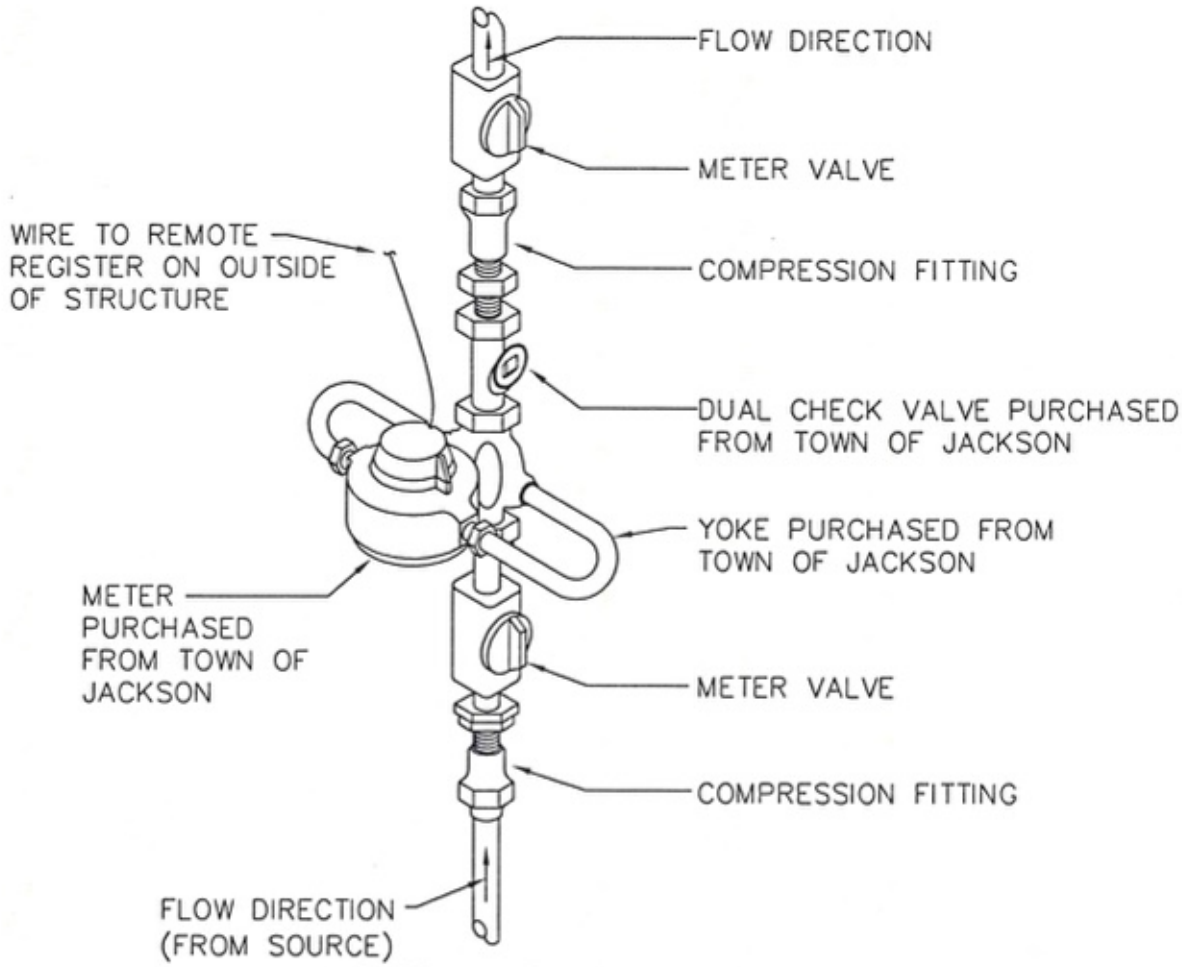

VERTICAL ALIGNMENT

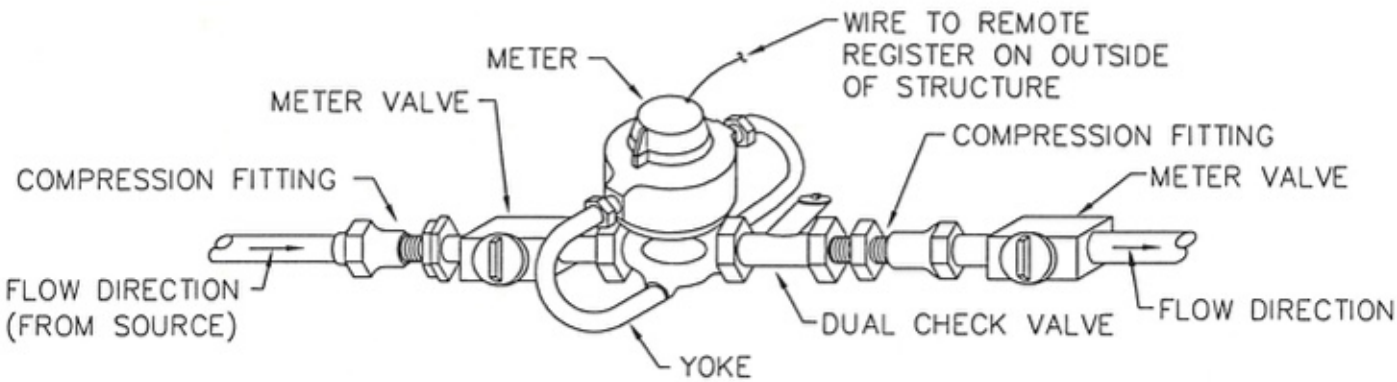

HORIZONTAL ALIGNMENT

NOTES:

1. SERVICE PIPE MATERIAL SHALL MEET ADOPTED PLUMBING CODE REQUIREMENTS.
2. METER SHALL BE INSTALLED WITH THE METER FACING UP.

WATER METER INSTALLATION (3/4" & 1" METERS, INTERIOR INSTALLATION)	W-112	DATE: *1/17/07*
	SCALE: *NTS*	

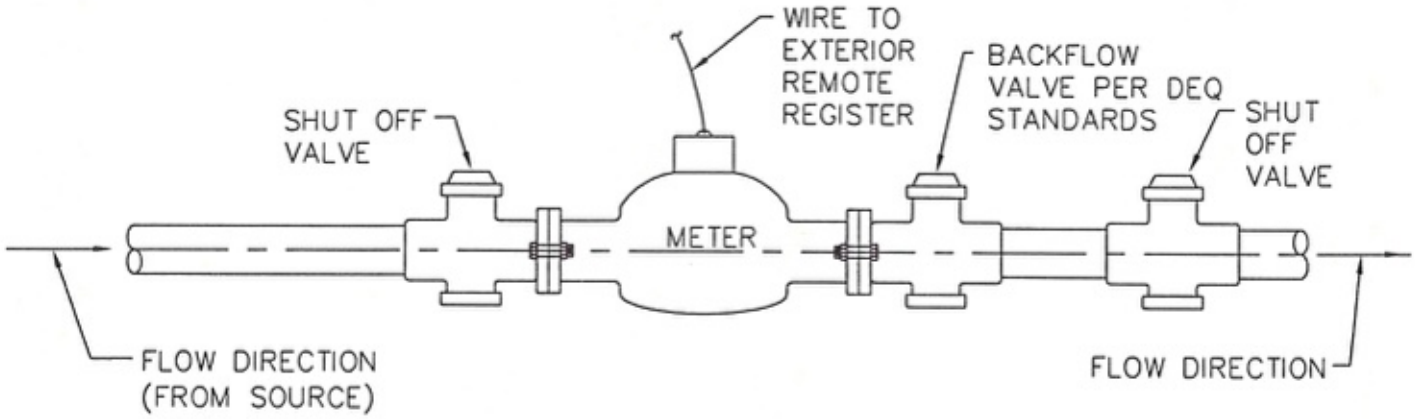

1-1/2" AND 2" DIAMETER ASSEMBLY

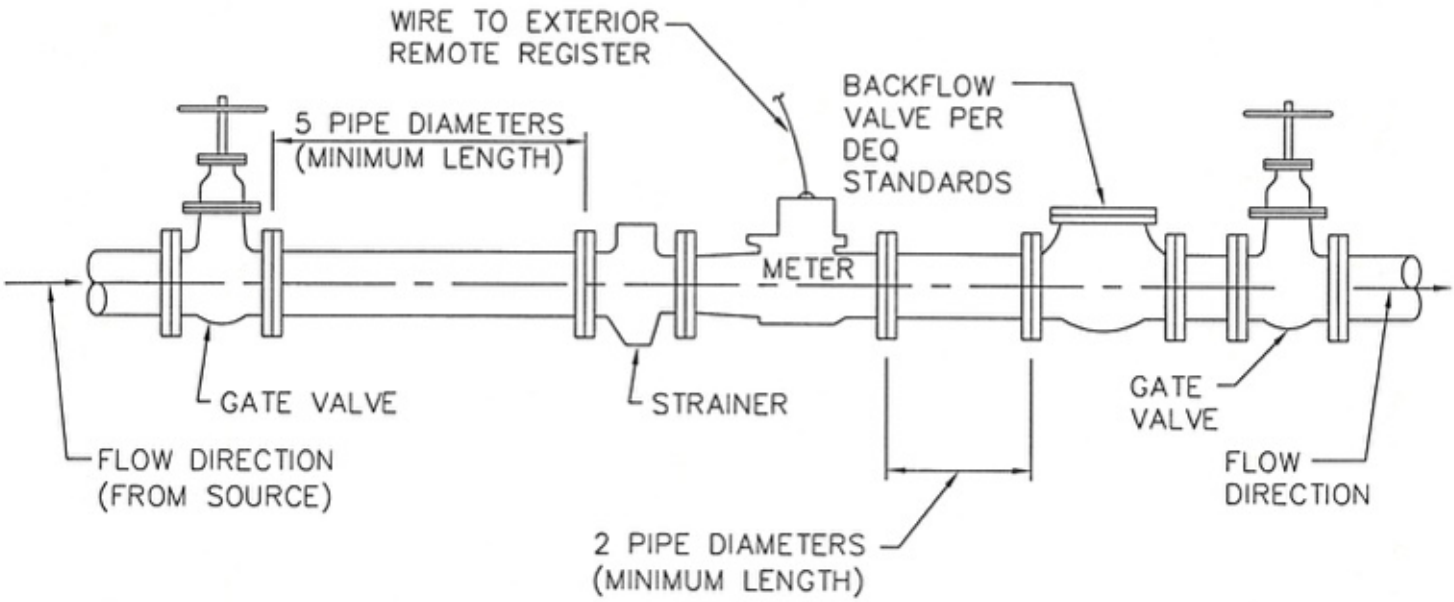

3" DIAMETER AND LARGER ASSEMBLY

NOTES:

1. SERVICE PIPE MATERIAL SHALL MEET ADOPTED PLUMBING CODE REQUIREMENTS.
2. METER SHALL BE INSTALLED IN HORIZONTAL ALIGNMENT ONLY.
3. CONNECTIONS WITHIN THE ASSEMBLY SHALL BE THREADED OR BOLTED FLANGED, AS APPROPRIATE.

WATER METER INSTALLATION (1-1/2" & LARGER METERS, INTERIOR INSTALLATION)	W-113	DATE: *1/17/07*
	SCALE: *NTS*	

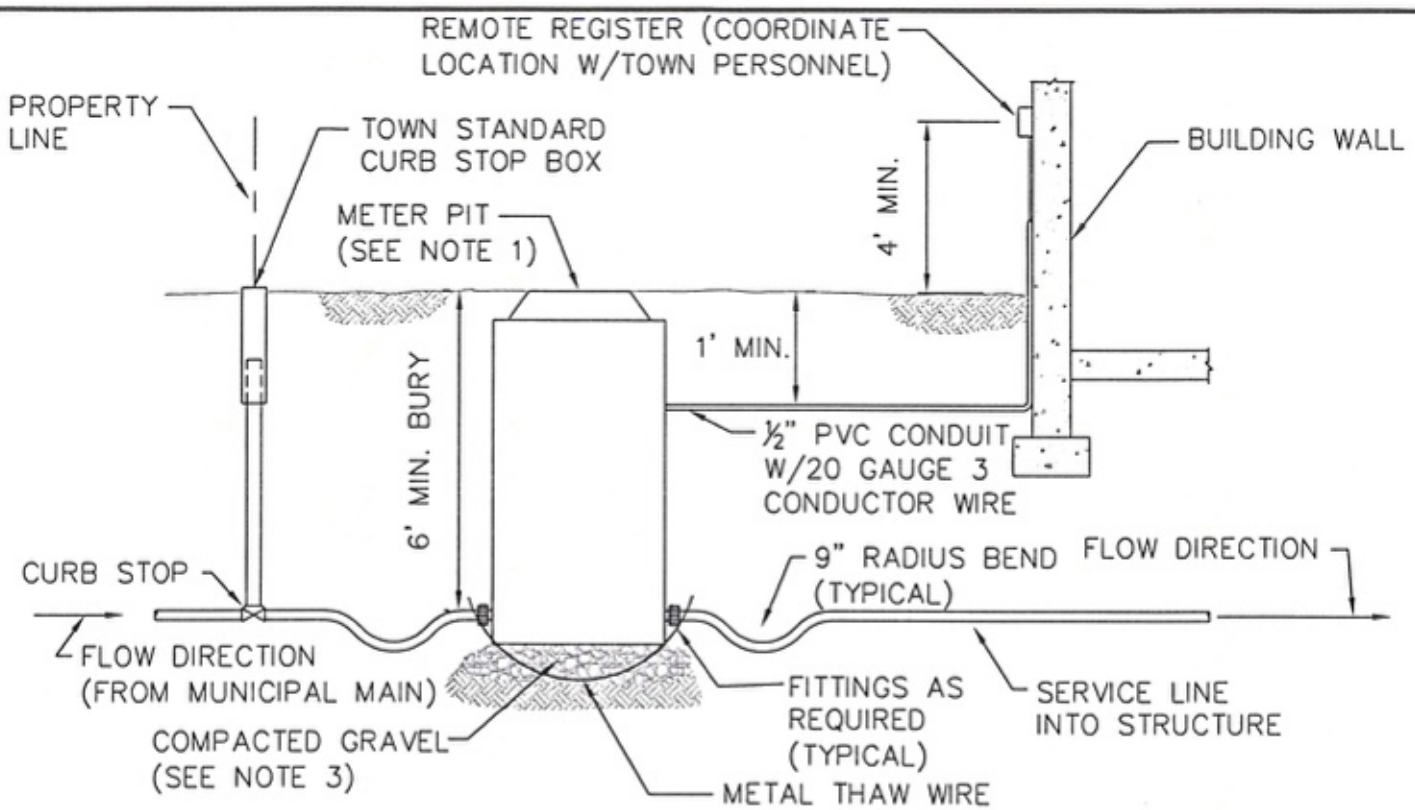

TYPICAL INSTALLATION

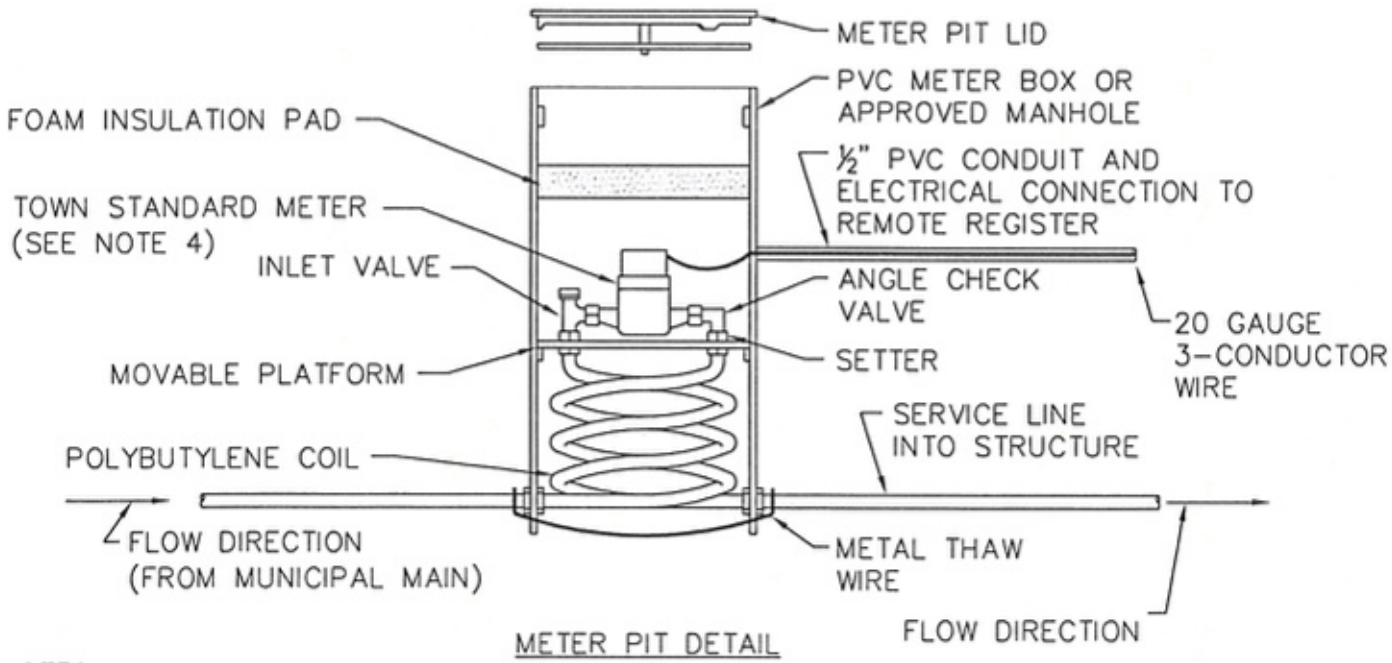

METER PIT DETAIL

NOTES:

1. 15" AND 18" DIAMETER METER PITS SHALL BE MUELLER/McCULLOUGH THERMAL-COIL METER BOX OR APPROVED SUBSTITUTE. 24" AND 27" DIAMETER METER PITS SHALL BE MUELLER/McCULLOUGH EZ-VAULT METER SETTER OR APPROVED MANHOLE DESIGN.
2. SERVICE PIPE MATERIAL SHALL MEET ADOPTED PLUMBING CODE REQUIREMENTS.
3. GRAVEL SHALL CONFORM TO WPWSS SECTION 02190, PART 2.03, GRADING H AND BE INSTALLED IN GENERAL CONFORMANCE WITH WPWSS SECTION 02231, PART 3.03.
4. METER SHALL BE INSTALLED IN HORIZONTAL ALIGNMENT, WITH METER FACING UP, ONLY.

WATER METER PIT (3/4" & 1" SERVICES, TYPICAL OUTDOOR INSTALLATION)	W-114	DATE: *1/17/07*
	SCALE: *NTS*	

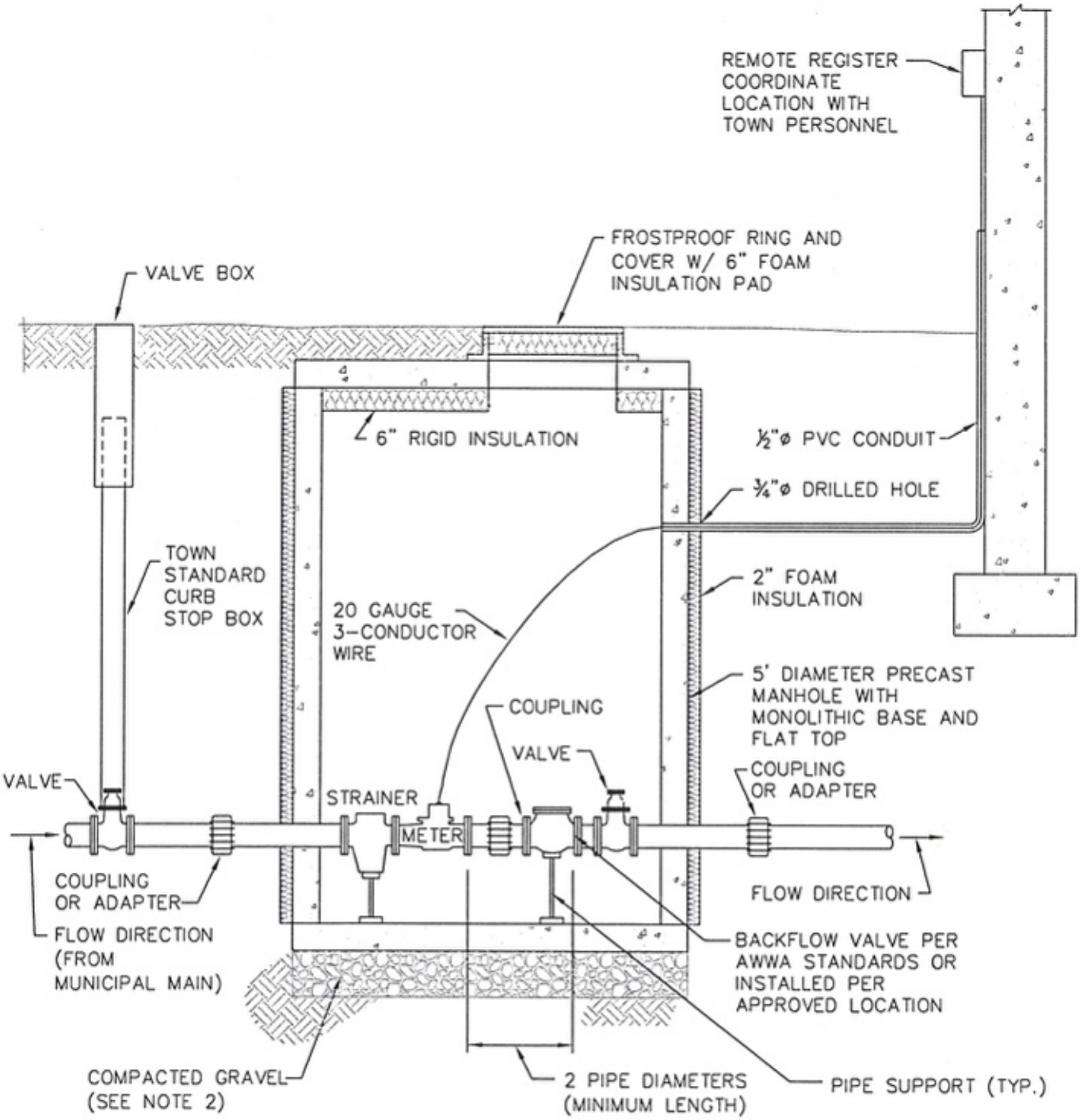

NOTES:

1. SERVICE PIPE MATERIAL SHALL MEET ADOPTED PLUMBING CODE REQUIREMENTS.
2. GRAVEL SHALL BE SIX INCH MINIMUM THICKNESS, CONFORM TO WPWSS SECTION 02190, PART 2.03, GRADING H, AND BE INSTALLED PER WPWSS SECTION 02231, PART 3.03.
3. ALL LARGE DIAMETER SERVICES SHALL BE PRE-APPROVED BY THE TOWN.

WATER METER PIT (LARGE DIAMETER SERVICES)	W-115	DATE: *1/17/07*
	SCALE: *NTS*	

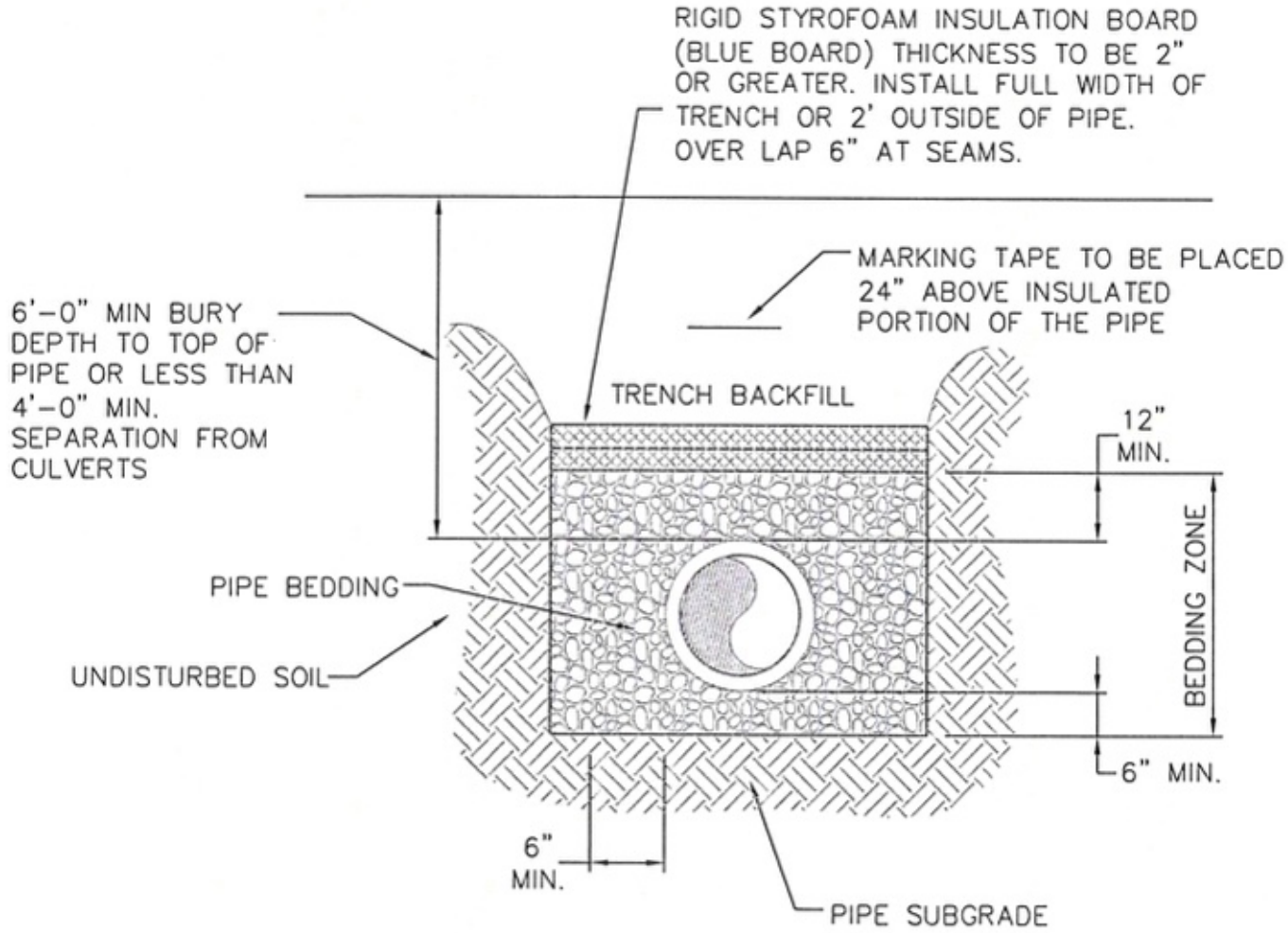

NOTES:

1. A CONDITION OF LESS THAN MINIMUM BURY DEPTH IS ALLOWED ONLY WITH WRITTEN APPROVAL FROM THE TOWN PRIOR TO CONSTRUCTION. INSULATION SHALL BE INSTALLED ON ALL PIPE THAT DOES NOT MEET MINIMUM BURY REQUIREMENTS.

2. INSULATION SHALL BE INSTALLED ON ALL PIPE THAT IS WITHIN FOUR FEET OF ANY DRAINAGE CULVERT. THIS APPLIES TO ANY SIDE OF THE PIPE WHICH IS NEAR THE CULVERT.

WATER PIPE INSULATION	W-116	DATE: *1/17/07*
	SCALE: *NTS*	

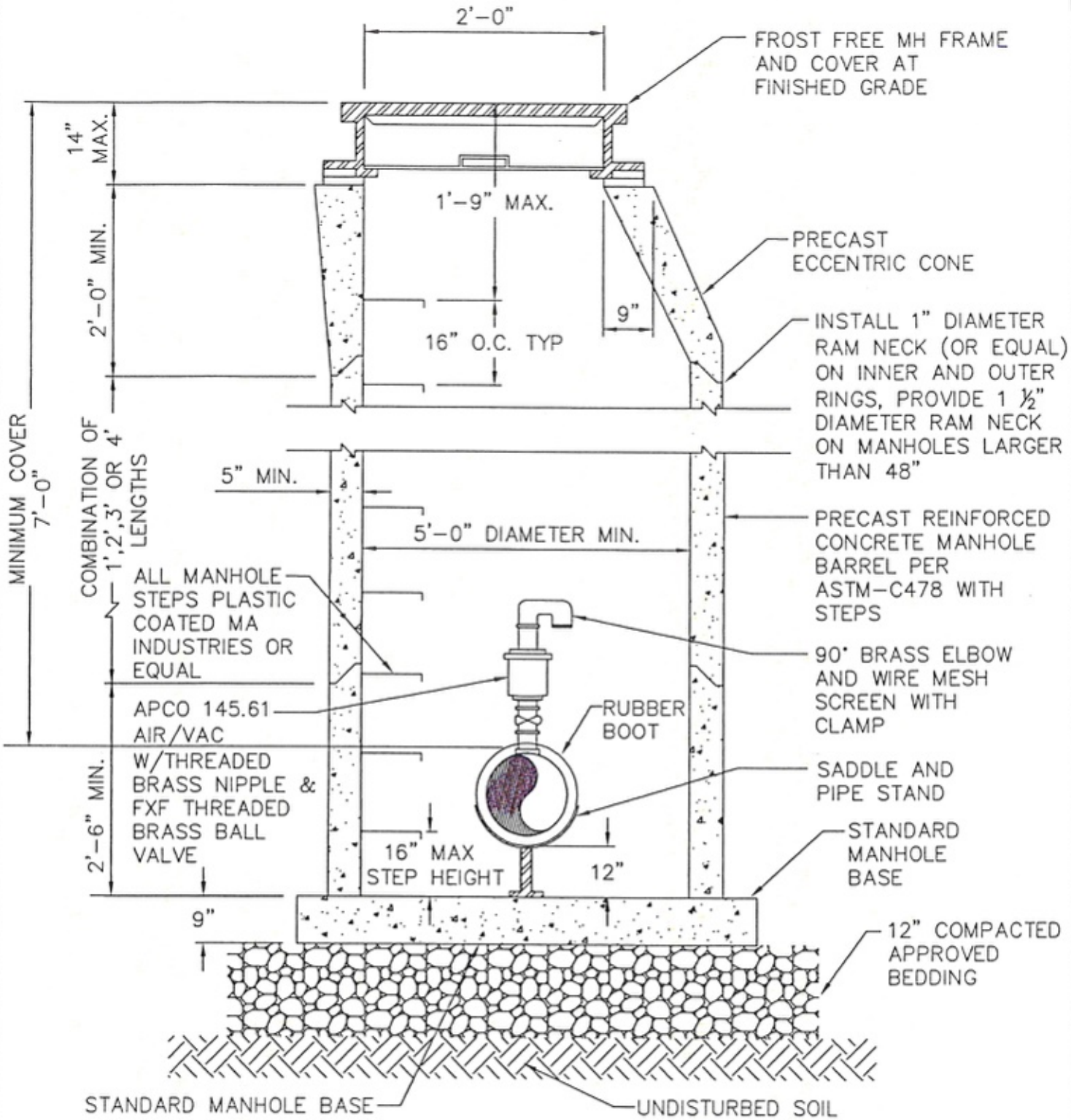

NOTES:

1. AN INSULATION BLANKET IS REQUIRED TO BE INSTALLED ON ALL ASSEMBLIES.
2. MANHOLE SHALL BE WATERTIGHT/SEALED.
3. WATER MAIN SHALL HAVE WATERTIGHT RUBBER BOOT ATTACHED WHERE IT ENTERS AND EXITS THE MANHOLE.

TOWN OF JACKSON WYOMING	*AIR VALVE/VAC MANHOLE*	W-117 DATE: *1/17/07*
		SCALE: *NTS*

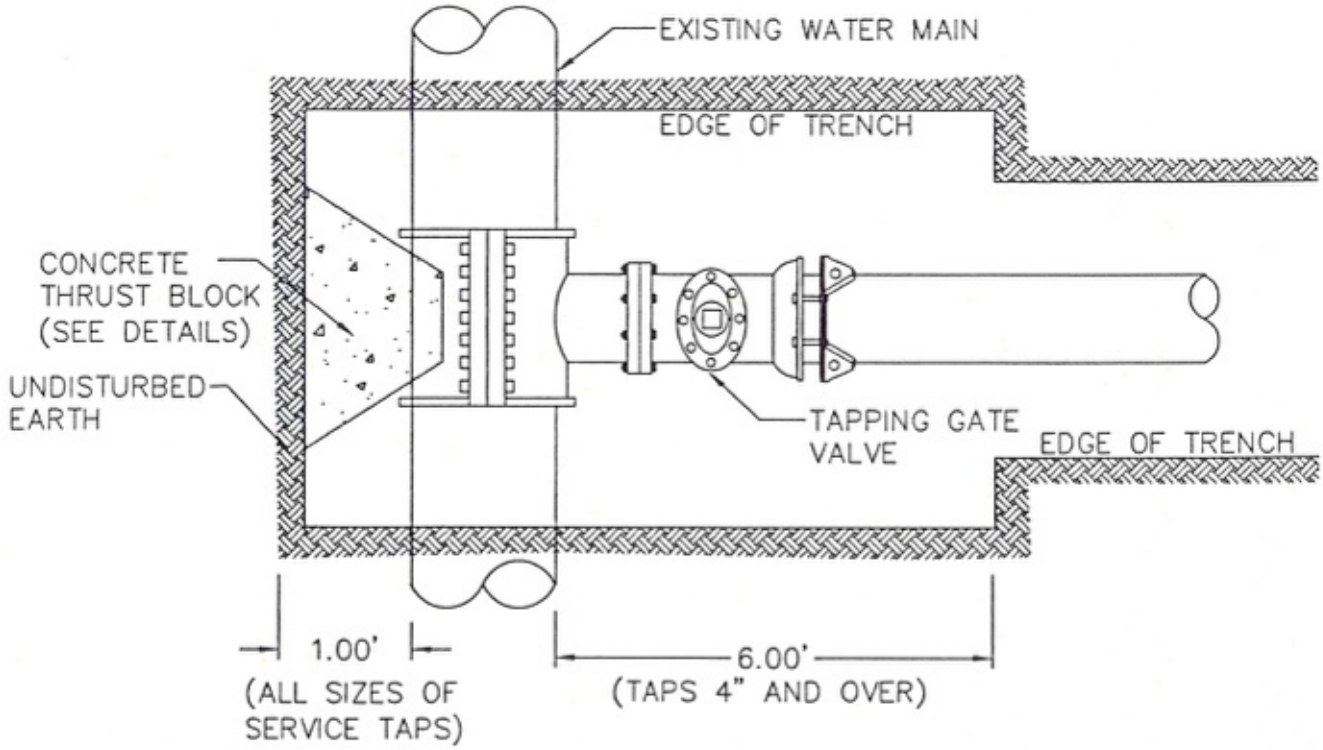

PLAN

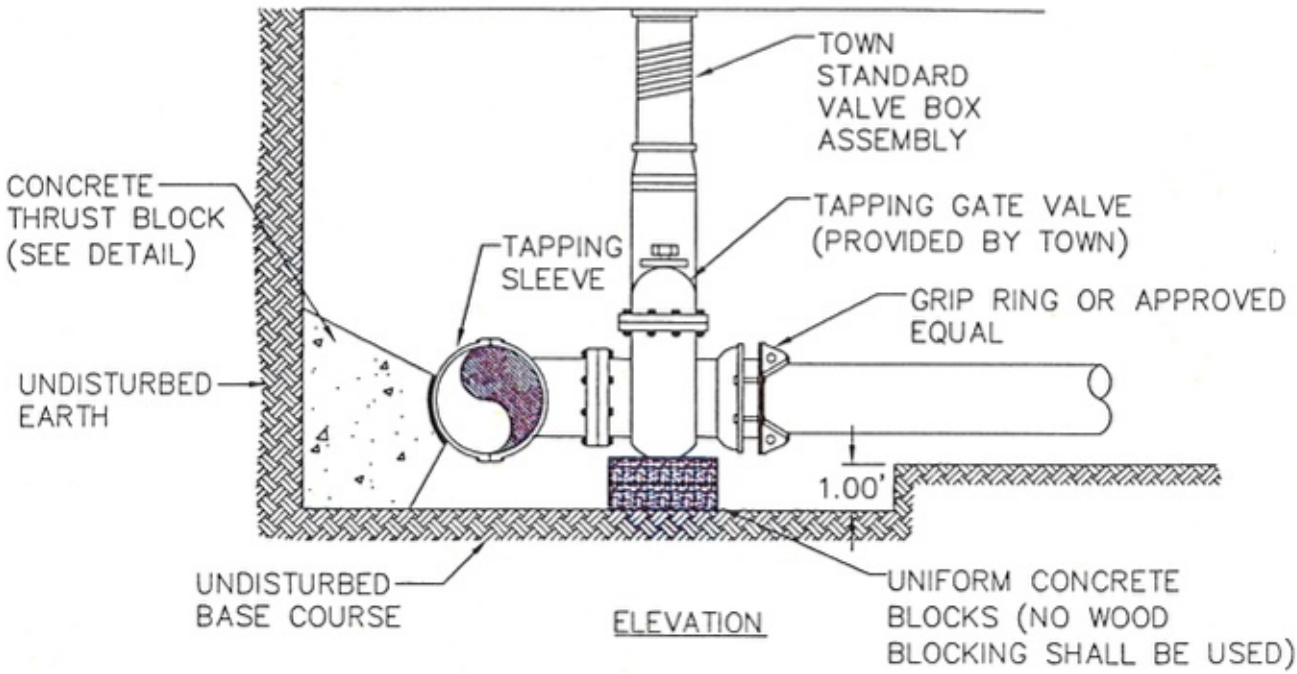

ELEVATION

NOTES:

1. THE TOWN SHALL COMPLETE THE TAPPING OF THE MAIN. NO OTHER PERSONS SHALL COMPLETE TAP WITHOUT CONSENT OF TOWN. ALL OTHER WATER MAIN WORK SHALL BE THE RESPONSIBILITY OF THE OWNER.
2. TRENCH WILL BE EXCAVATED TO MEET ALL WYOSHA STANDARDS PRIOR TO TAPPING.

TOWN OF JACKSON WYOMING	*WATER MAIN TAPPING DETAIL*	W-118 DATE: 1/17/07
		SCALE: NTS

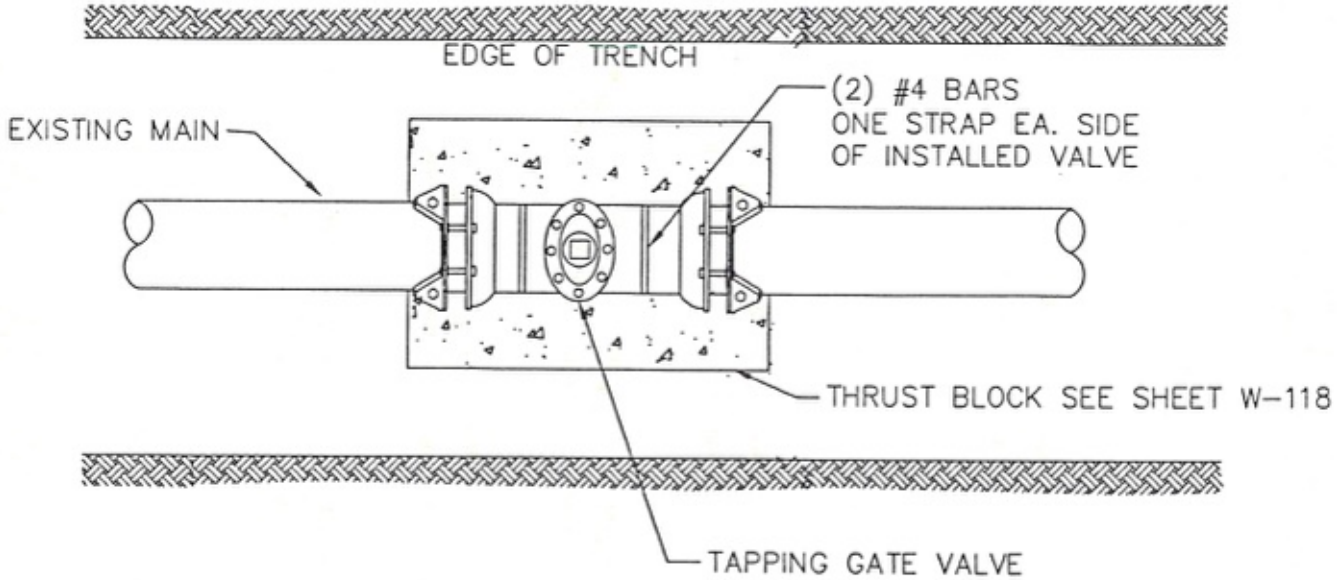

PLAN

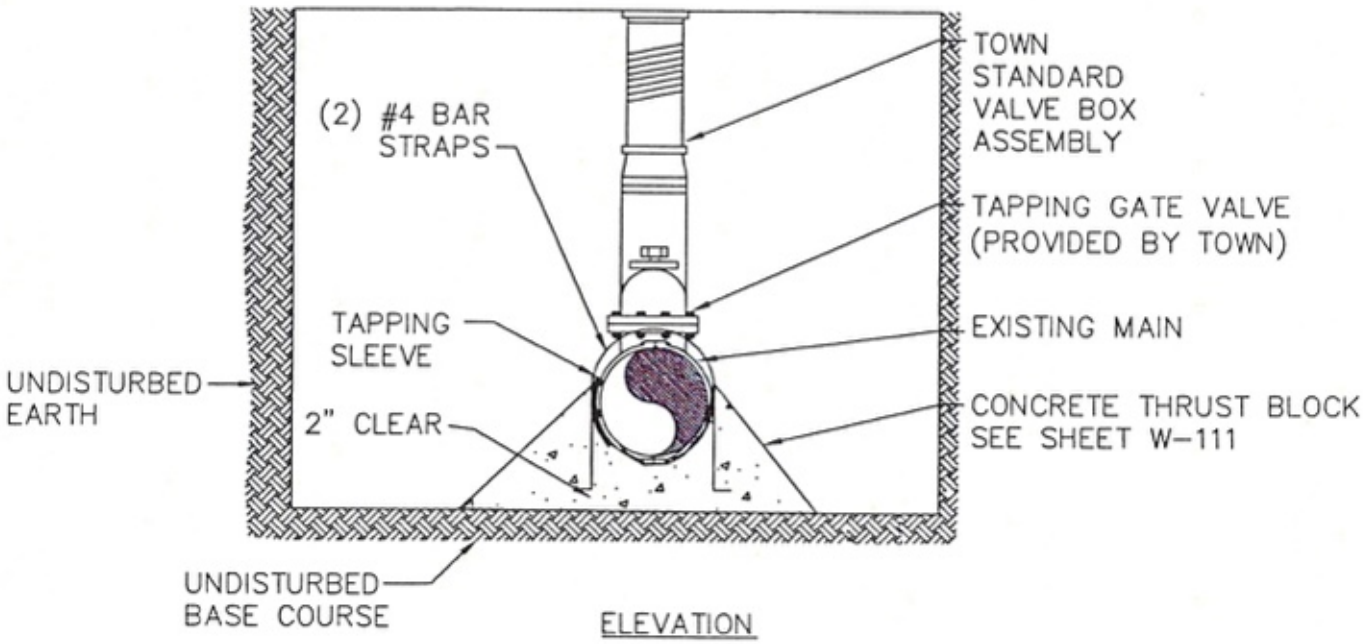

ELEVATION

NOTES:

1. THE TOWN SHALL COMPLETE THE TAPPING OF THE MAIN. NO OTHER PERSONS SHALL COMPLETE TAP WITHOUT CONSENT OF TOWN. ALL OTHER WATER MAIN WORK SHALL BE THE RESPONSIBILITY OF THE OWNER.
2. TRENCH WILL BE EXCAVATED TO MEET ALL WYOSHA STANDARDS PRIOR TO TAPPING.
3. 4 MIL POLYETHELENE PLASTIC BOND BREAKER SHALL BE INSTALLED BETWEEN THRUST BLOCK AND WATER PIPE.

TOWN OF JACKSON WYOMING	*IN LINE WATER VALVE*	W-119 DATE: *1/17/07*
		SCALE: *NTS*

Sanitary Sewer Details

2008

SS-100….Sewer Main & Service Trench Detail

SS-101….Standard Sewer Manhole

SS-102….Cone Sewer Manhole

SS-103….Flat Top Sewer Manhole

SS-104….Drop Sewer Manhole

SS-105…."Dog House" Sewer Manhole

SS-106….Manhole Steps

SS-107….Manhole Channel Details

SS-108….Manhole Frame and Cover

SS-109….Manhole Adjustment & Collar for Asphalt Surfaces

SS-110….Manhole Adjustment & Collar for Gravel Surfaces

SS-111….Sanitary Sewer Service Line

SS-112….Connection to Existing Service Stub-Out

SS-113….Sewer Service Line Repair

SS-114….Service Lateral Building Cleanout

SS-115….Sewer Main Tapping

SS-116….Sewer Pipe Encasement

SANITARY SEWER MAINS TESTING STANDARDS

SANITARY SEWER MAINS, INCLUDING MANHOLES, WHICH ARE WITHIN THE TOWN OR WHICH DISCHARGE TO THE TOWNS SYSTEM SHALL BE SUBJECTED TO AND PASS CERTAIN PERFORMANCE TESTS PRIOR TO THEIR ACCEPTANCE BY THE TOWN OF JACKSON. SUCH TESTS SHALL BE CONDUCTED IN THE PRESENCE OF AUTHORIZED STAFF OF THE TOWN OF JACKSON. ANY REMEDY OF DEFECTS SHALL BE CARRIED OUT AT THE EXPENSE OF THE CONTRACTOR.

PIPE LEAKAGE

LEAKAGE TESTS SHALL BE INFILTRATION, EXFILTRATION, OR AIR TESTS.

(A) **INFILTRATION TEST STANDARD.** THE MAXIMUM ALLOWABLE INFILTRATION, INCLUDING MANHOLES, SHALL NOT EXCEED 50 GALLONS PER INCH DIAMETER PER MILE PER DAY WITH A MINIMUM OF TWO FEET OF HEAD OVER THE TOP OF THE PIPE.

(B) **EXFILTRATION TEST STANDARD.** THE MAXIMUM ALLOWABLE EXFILTRATION, INCLUDING MANHOLES, SHALL NOT EXCEED 50 GALLONS PER INCH DIAMETER PER MILE PER DAY WITH A MINIMUM OF TWO FEET OF HEAD OVER THE TOP OF THE PIPE.

(C) **AIR TEST STANDARD.** AIR TESTS SHALL CONFORM TO ASTM C-828-80.

PIPE DEFLECTION

AFTER A SANITARY SEWER MAIN TRENCH HAS BEEN BACKFILLED AND COMPACTED AS SPECIFIED, A MANDREL TEST SHALL BE MADE BETWEEN MANHOLES TO CHECK DEFLECTION OF FLEXIBLE PIPE. THE MAXIMUM ALLOWABLE DEFLECTION SHALL BE A FIVE-PERCENT DEFLECTION. A MANDREL OF 95 PERCENT OF PIPE DIAMETER SHALL BE USED. NO MECHANICAL PULLING OF THE MANDREL IS PERMITTED.

VIDEO INSPECTION

A DVD RECORD OF INSTALLED SANITARY SEWER MAINS SHALL BE MADE AND SUBMITTED TO THE TOWN FOR REVIEW PRIOR TO ACCEPTANCE OF THE MAINS BY THE TOWN OF JACKSON. PROBLEMS NOTED IN THE TOWN'S REVIEW OF THE VIDEO RECORD SHALL BE CORRECTED PRIOR TO ACCEPTANCE OF THE MAINS BY THE TOWN OF JACKSON.

TOWN REQUIRED SERVICE LINE INSPECTIONS

ALL SEWER SERVICES SHALL BE VISUALLY INSPECTED BY TOWN PERSONNEL. THIS INSPECTION SHALL INCLUDE, BUT NOT BE LIMITED TO, A REVIEW OF TRENCH BACKFILL, PIPE BEDDING, COMPACTION EFFORTS AND THE WITNESSING OF PIPE LEAKAGE TEST. THESE INSPECTIONS SHALL BE REQUIRED FROM THE POINT OF CONNECTION TO THE TOWN MAIN TO THE POINT OF ENTERING THE BUILDING.

STANDARD TOWN SEWER SYSTEM MATERIALS

THE FOLLOWING IS A LIST OF TOWN STANDARD MATERIALS, WHICH ARE TO BE USED IN COMPLETING SEWER IMPROVEMENT PROJECTS WHICH ARE PART OF, OR CONNECTED TO, THE TOWNS SEWER SYSTEM.

Sewer Main Pipe
All sewer main pipe shall be PVC pipe and fittings which shall conform to ASTM D-3034, "Standard Specification for Polyvinyl Chloride Sewer Pipe and Fittings", or ASTM F-679 for sizes over 15 inches (15") in diameter. PVC pipe shall have a minimum Standard Dimension Ratio (SDR) of 35.

Sewer Service Pipe
Schedule 40 sewer pipe conforming to ASTM D1785 and listed with NSF-PW Standards 61 & Standard 14 or ABS sewer pipe conforming to ASTM F-628 (Schedule 40 cell core pipe).

Couplings
Couplings for making connections between new PVC service lines and like-sized, or nearly like-sized, existing service lines shall be Fernco Series 1000 or PipeConx rubber joint couplings, with stainless steel bands, or approved equal. Determine the actual O.D. of the existing lines prior to ordering these couplings

Transition couplings required to join new and existing sewer main line shall be Cascade Style CSST clamp couplings supplied in a 12-inch length, or an approved equal. Determine the actual O.D. of the existing lines prior to ordering these couplings.

Manholes
Manholes in 48-inch diameter shall be constructed of precast concrete rings with frames and covers and steps in accordance with the plan details. All manholes shall be designed to withstand AASHTO HS-25 loading.

Ring and Cover
Rings and covers shall be D&L A-1055, non-ventilated, with one 5/8" pick hole around the circumference and the word "SEWER" cast into the top.

Concrete adjusting rings may be used for adjusting the manhole top elevation to coincide with proposed ground elevations, except the total height of adjusting rings used per manhole shall not exceed 12 inches. Adjusting rings shall be reinforced with the same percentage of steel as the riser and top. All rings shall be supplied with an inside diameter of no less than 24". Precast Concrete rings for manholes shall conform to ASTM C-478, "Precast Reinforced Concrete Manhole Risers and Tops".

Steps

Noncorrosive steps of rubber encased steel, aluminum, or nylon shall be used. Steps shall withstand vertical loads of 400 pounds and pull-out resistance of 1,000 pounds.

Concrete Bases

Concrete bases shall incorporate precast or cast-in-place floors and shall be installed on undisturbed earth. Concrete shall conform to Section 03304, PORTLAND CEMENT CONCRETE. Base sections shall incorporate Kor-N-Seal rubber boots, or equal.

Concrete Collars

Concrete collars shall be poured in the field on compacted trench backfill. Concrete shall conform to Section 03304, Portland Cement Concrete, Class 4000.

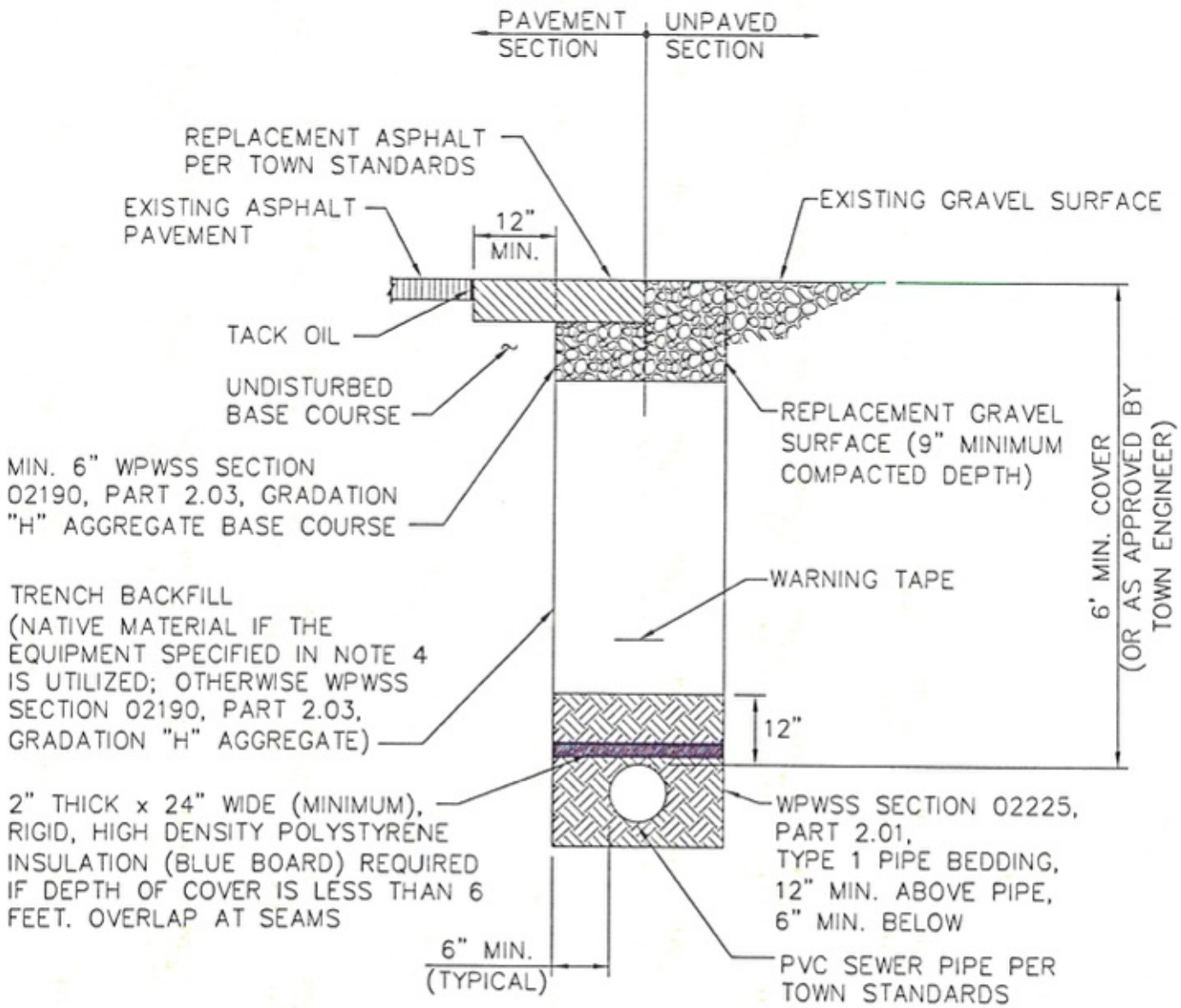

NOTES:

1. TRENCH BACKFILL BELOW THE SURFACE SHALL MEET THE FOLLOWING CRITERIA:
   - 95% MODIFIED PROCTOR DENSITY WITHIN STREET AND ALLEY RIGHTS-OF-WAY.
   - 90% MODIFIED PROCTOR DENSITY OUTSIDE STREET AND ALLEY RIGHTS-OF-WAY.
2. COMPACTION OF TRENCH BACKFILL SHALL BE CARRIED OUT WITH A HOE-PACK OR A SHEEPS FOOT ROLLER ON A BACK-HOE ARM.
3. PIPE BEDDING SHALL BE PLACED IN 6" LIFTS AND THOROUGHLY COMPACTED TO PROVIDE UNIFORM PIPE SUPPORT.
4. ALL TRENCH EXCAVATION SHALL CONFORM TO WYOMING OCCUPATIONAL HEALTH AND SAFETY ADMINISTRATION (WOSHA) REGULATIONS.

TOWN OF JACKSON WYOMING	*SEWER MAIN & SERVICE TRENCH DETAIL*	SS-100 DATE: *1/17/07*
		SCALE: *NTS*

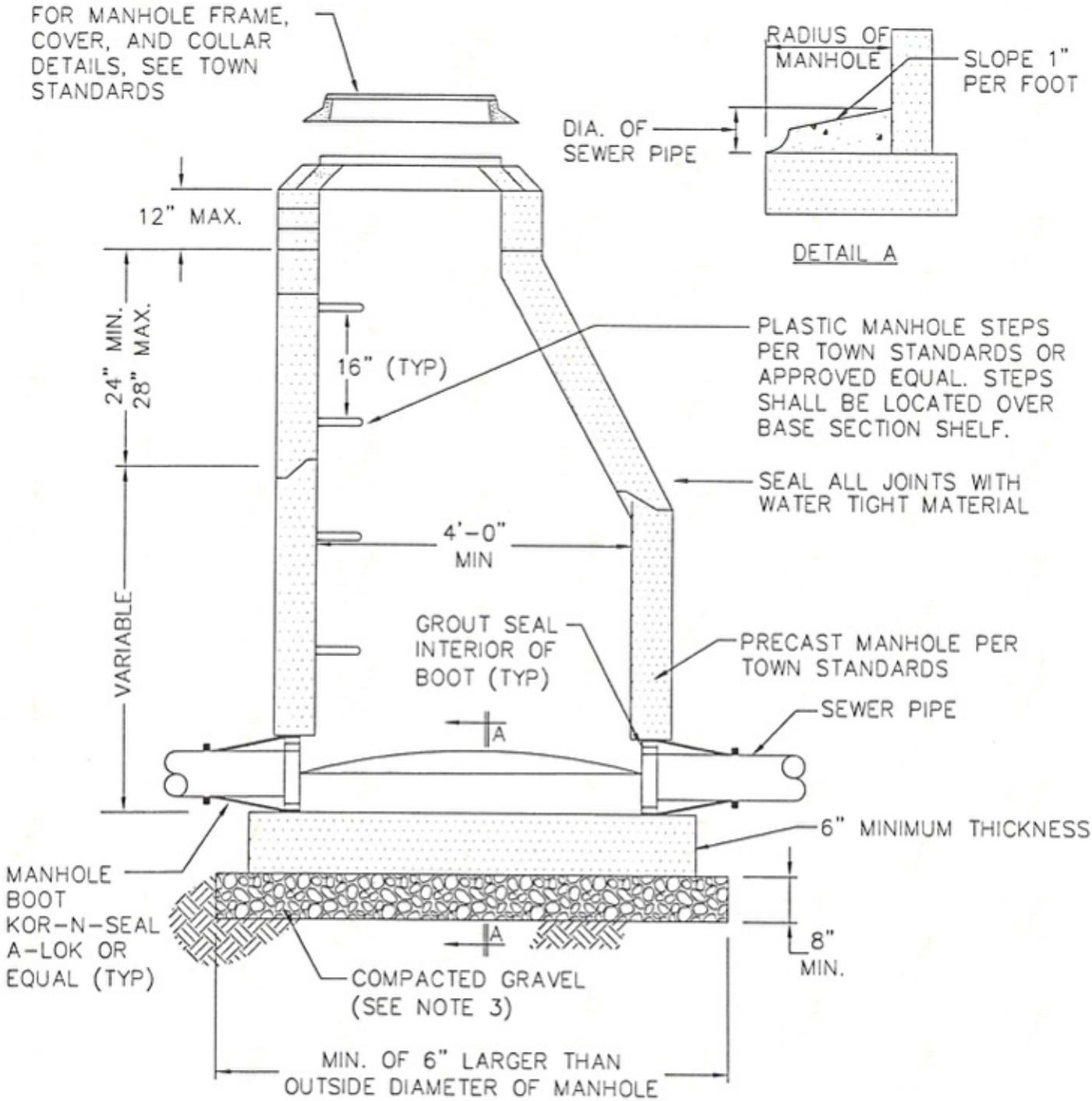

NOTES:

1. DROP ACROSS INVERT SHALL BE GREATER THAN OR EQUAL TO SLOPE OF ADJACENT SEWER PIPE.
2. BASE SHALL BE REINFORCED WHEN THE DISTANCE FROM INVERT TO TOP OF COVER EXCEEDS 15'. REINFORCEMENT TO BE APPROVED BY ENGINEER.
3. GRAVEL SHALL BE EIGHT INCH MINIMUM THICKNESS, CONFORM TO WPWSS SECTION 02190, PART 2.03, GRADING H, AND BE INSTALLED PER WPWSS SECTION 02231, PART 3.03.
4. ALL PIPES GOING INTO MANHOLE SHALL BE INSTALLED TO MATCH TOP OF PIPE CROWNS.
5. TROUGH DEPTH AT CENTER TO BE HALF THE DIAMETER OF THE PIPE.

TOWN OF JACKSON WYOMING	*STANDARD SEWER MANHOLE*	SS-101 DATE: *1/17/07*
		SCALE: *NTS*

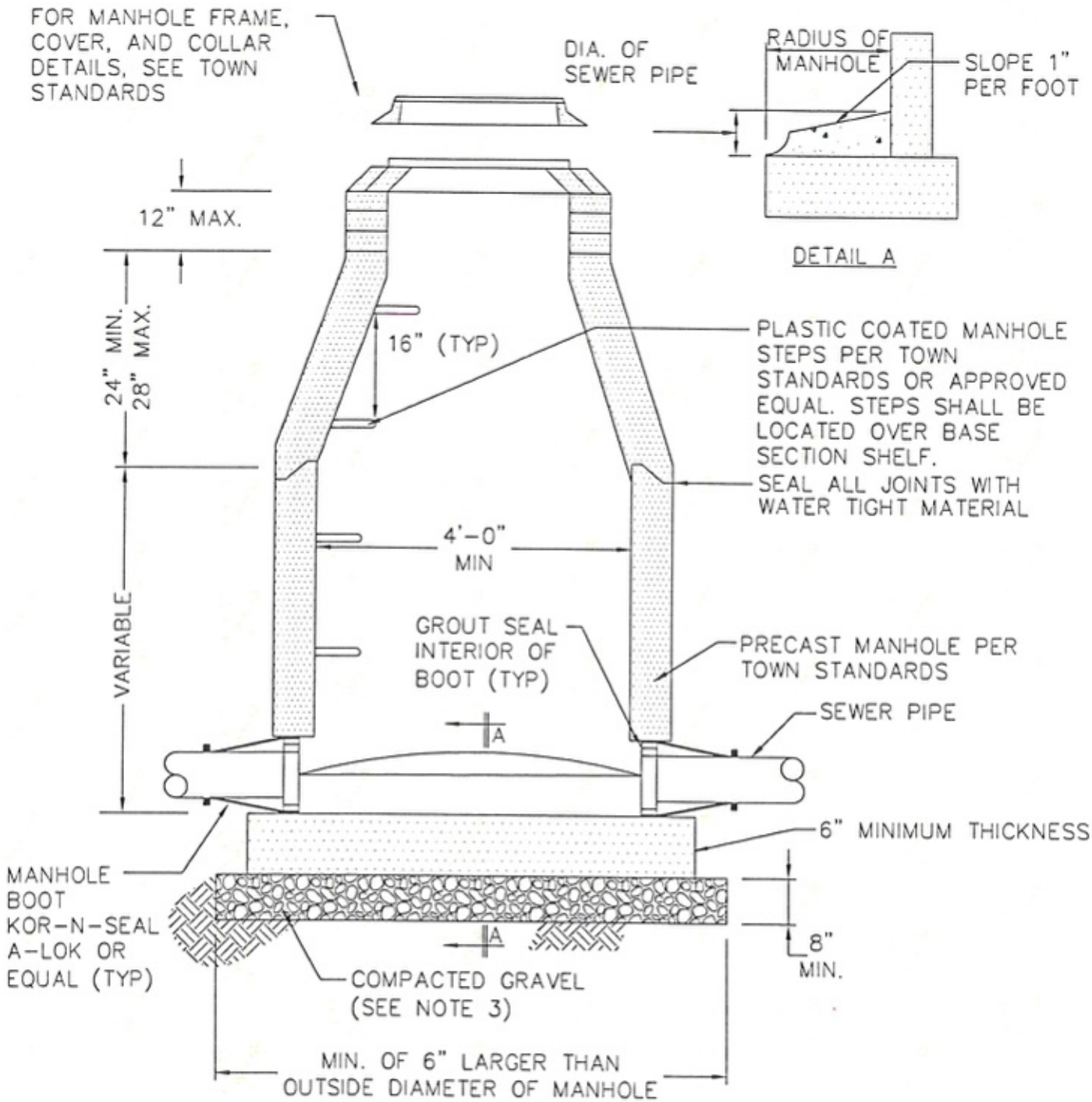

NOTES:

1. DROP ACROSS INVERT SHALL BE GREATER THAN OR EQUAL TO SLOPE OF ADJACENT SEWER PIPE.
2. BASE SHALL BE REINFORCED WHEN THE DISTANCE FROM INVERT TO TOP OF COVER EXCEEDS 15'. REINFORCEMENT TO BE APPROVED BY ENGINEER.
3. GRAVEL SHALL BE EIGHT INCH MINIMUM THICKNESS, CONFORM TO WPWSS SECTION 02190, PART 2.03, GRADING H, AND BE INSTALLED PER WPWSS SECTION 02231, PART 3.03.
4. ALL PIPES GOING INTO MANHOLE SHALL BE INSTALLED TO MATCH TOP OF PIPE CROWNS.
5. TROUGH DEPTH AT CENTER TO BE HALF THE DIAMETER OF THE PIPE.

TOWN OF JACKSON WYOMING	*CONE SEWER MANHOLE*	SS-102 DATE: *1/17/07*
		SCALE: *NTS*

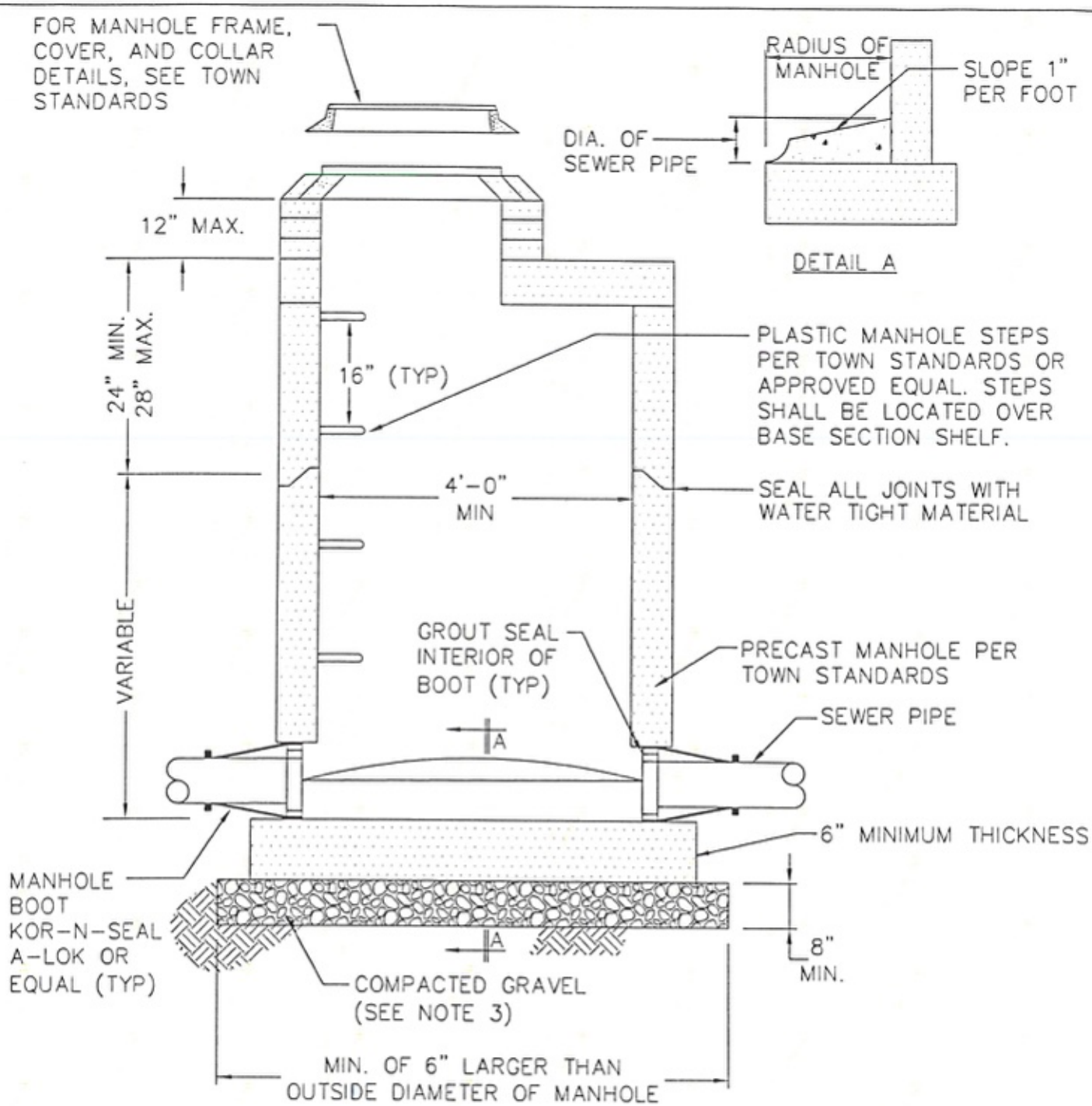

NOTES:

1. DROP ACROSS INVERT SHALL BE GREATER THAN OR EQUAL TO SLOPE OF ADJACENT SEWER PIPE.
2. BASE SHALL BE REINFORCED WHEN THE DISTANCE FROM INVERT TO TOP OF COVER EXCEEDS 15'. REINFORCEMENT TO BE APPROVED BY ENGINEER.
3. GRAVEL SHALL BE EIGHT INCH MINIMUM THICKNESS, CONFORM TO WPWSS SECTION 02190, PART 2.03, GRADING H, AND BE INSTALLED PER WPWSS SECTION 02231, PART 3.03.
4. ALL PIPES GOING INTO MANHOLE SHALL BE INSTALLED TO MATCH TOP OF PIPE CROWNS.
5. TROUGH DEPTH AT CENTER TO BE HALF THE DIAMETER OF THE PIPE.

TOWN OF JACKSON WYOMING	*FLAT TOP SEWER MANHOLE*	SS-103 DATE: 1/11/07
		DATE: NTS

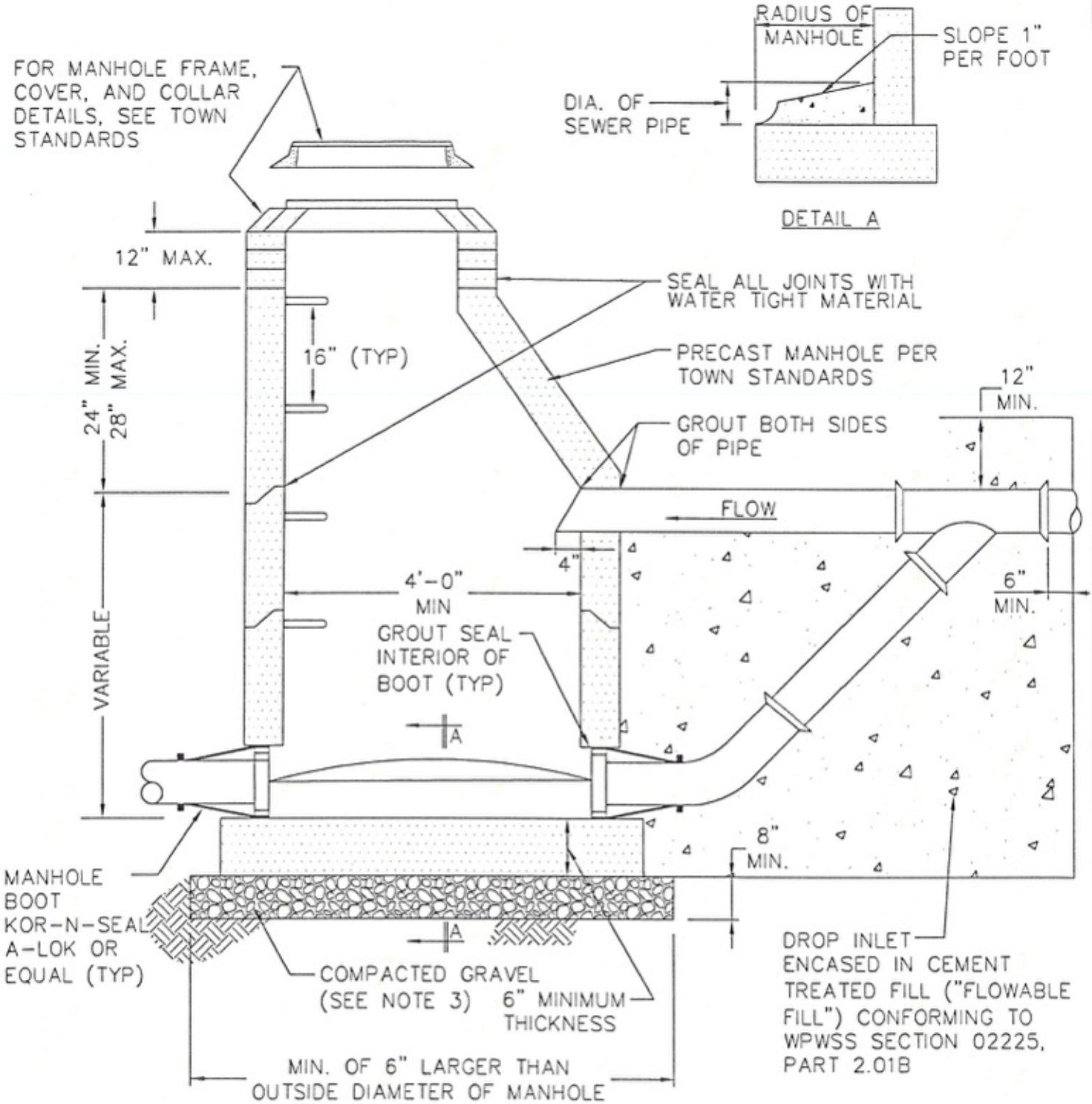

NOTES:

1. DROP ACROSS INVERT SHALL BE GREATER THAN OR EQUAL TO SLOPE OF ADJACENT SEWER PIPE.
2. BASE SHALL BE REINFORCED WHEN THE DISTANCE FROM INVERT TO TOP OF COVER EXCEEDS 15'. REINFORCEMENT TO BE APPROVED BY ENGINEER.
3. GRAVEL SHALL BE EIGHT INCH MINIMUM THICKNESS, CONFORM TO WPWSS SECTION 02190, PART 2.03, GRADING H, AND BE INSTALLED PER WPWSS SECTION 02231, PART 3.03.
4. TROUGH DEPTH AT CENTER TO BE HALF THE DIAMETER OF THE PIPE.

TOWN OF JACKSON WYOMING	*DROP SEWER MANHHOLE*	SS-104 DATE: 1/17/07
		SCALE: NTS

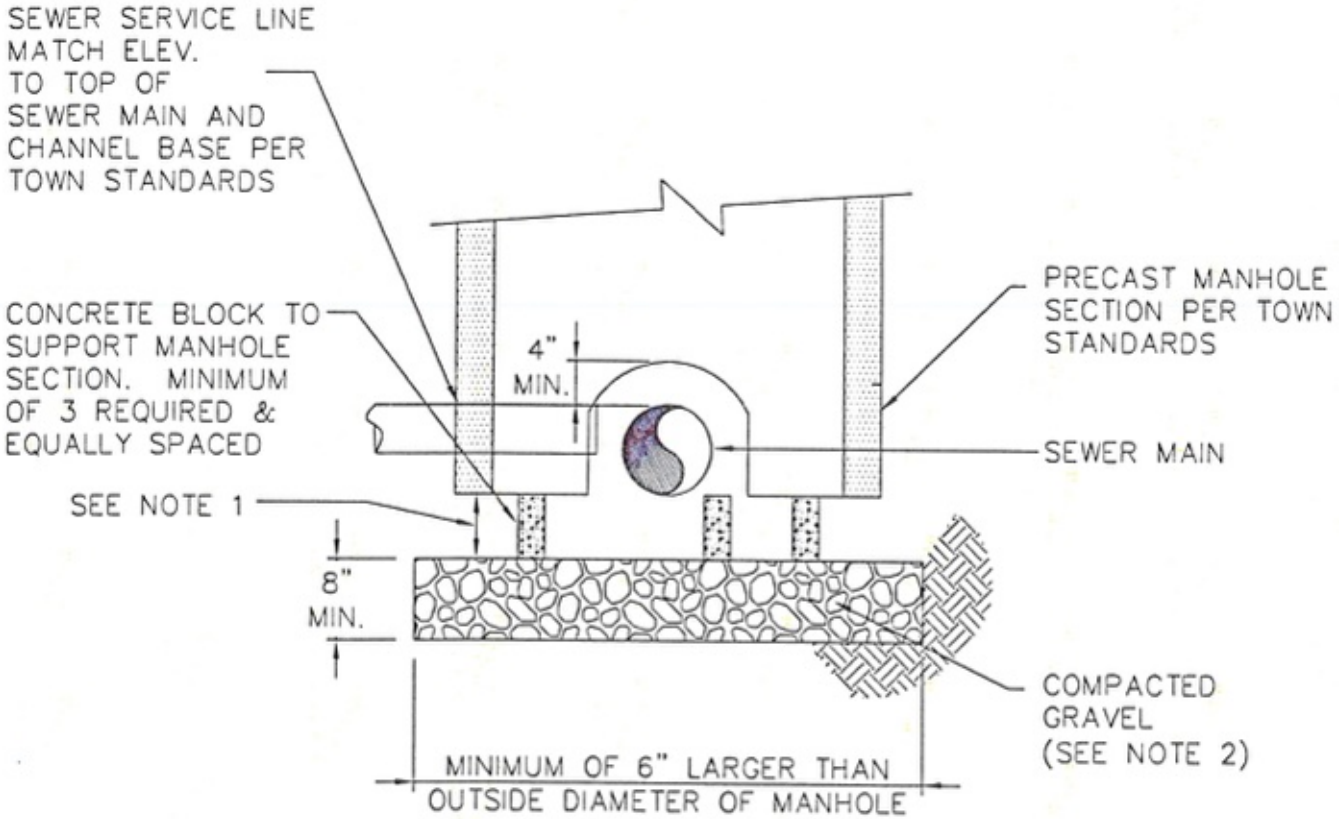

INSTALLATION MUST BE INSPECTED AND APPROVED BY TOWN PUBLIC WORKS DEPARTMENT AT THE TIME OF INSTALLATION.

NOTES:

1. PROVIDE A MINIMUM OF 12" CLEARANCE UNDER OUTSIDE OF SEWER MAIN. 4000 PSI FIBER MESH CONCRETE SHALL BE PLACED IN THIS AREA. INTERIOR OF MANHOLE SHALL CONFORM TO TOWN STANDARD DIMENSIONS AND SHELF SLOPES.
2. GRAVEL SHALL BE EIGHT INCH MINIMUM THICKNESS, CONFORM TO WPWSS SECTION 02190, PART 2.03, GRADE H, AND BE INSTALLED PER WPWSS SECTION 02231, PART 3.03.

"DOG HOUSE" SEWER MANHOLE	SS-105	DATE: *1/17/07*
	SCALE: *NTS*	

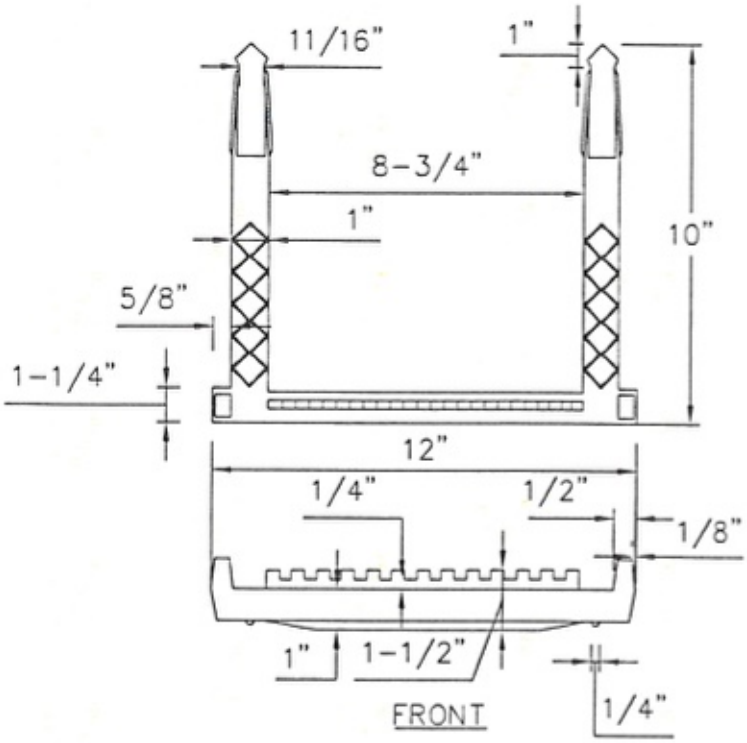

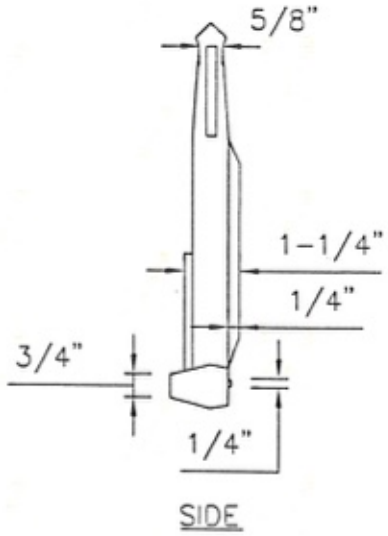

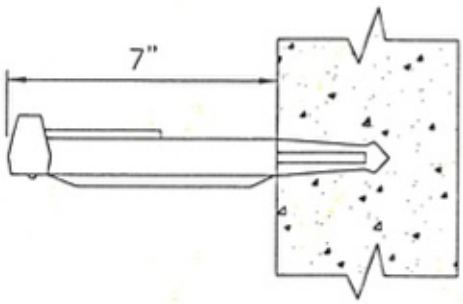

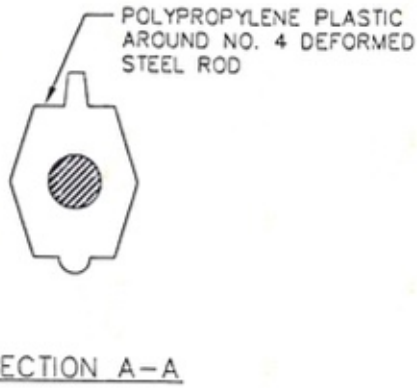

NOTES:

1. PLACE INTO WET CONCRETE WALL DURING MANUFACTURE OR MORTAR INTO HOLES AFTER CONCRETE HAS SET.
2. PLASTIC COATED STEPS PER THIS STANDARD DRAWING OR AS APPROVED BY THE ENGINEER.

TOWN OF JACKSON WYOMING	*MANHOLE STEPS*	SS-106 DATE: *1/15/07*
		SCALE: *NTS*

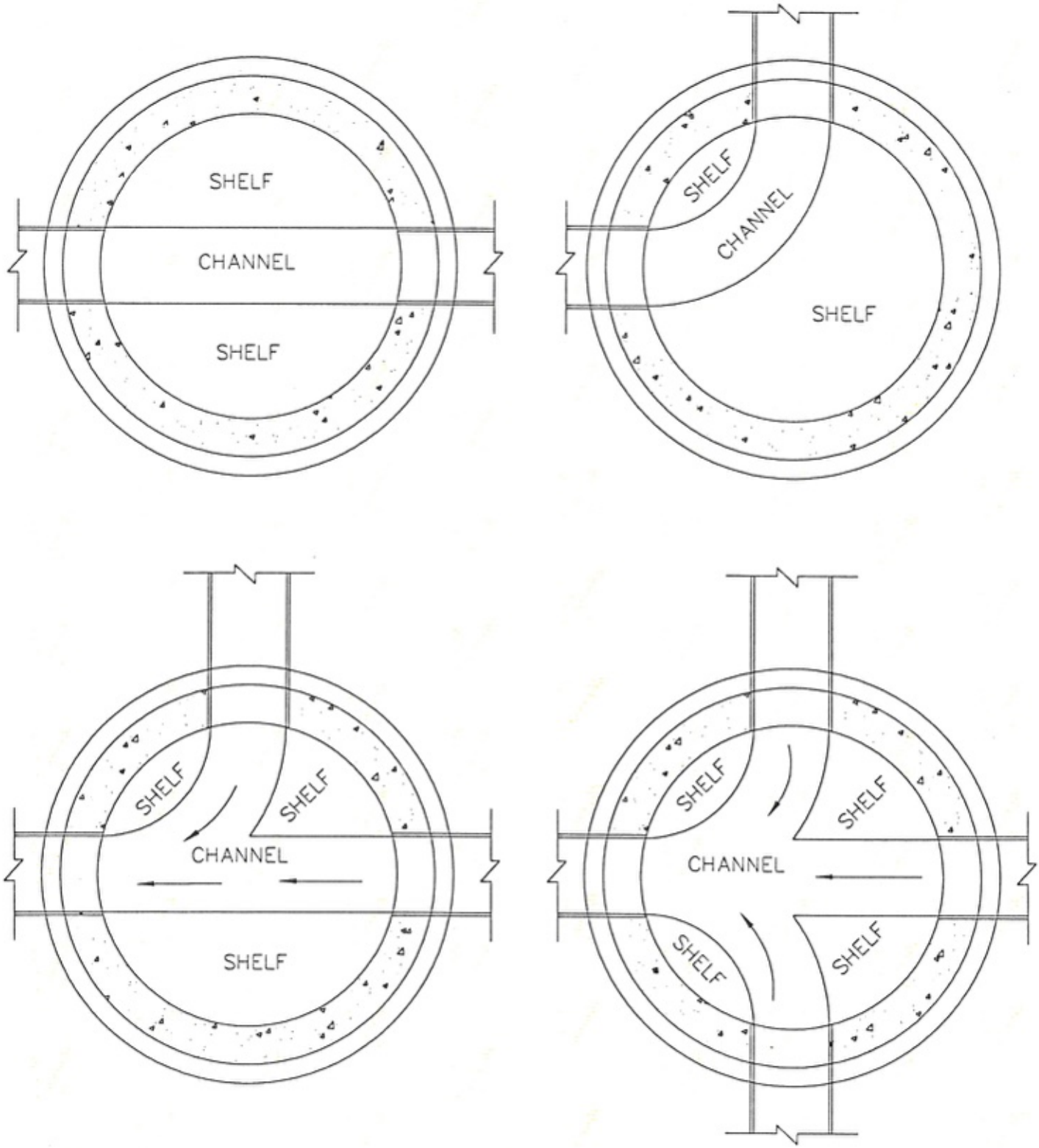

NOTES:

1. SLOPE ALL SHELVES TO CHANNEL AT 1" PER FOOT.
2. SEE PLAN-PROFILE SHEETS FOR SLOPE OF CHANNEL.

TOWN OF JACKSON WYOMING	*MANHOLE CHANNEL DETAILS*	SS-107 DATE: *1/15/07*
		SCALE: *NTS*

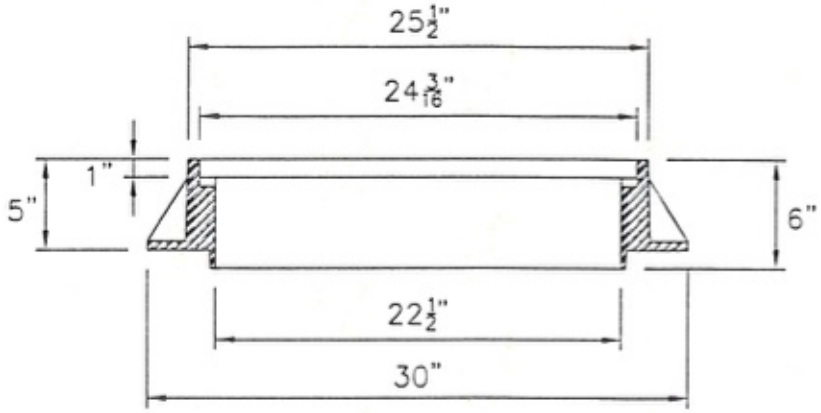

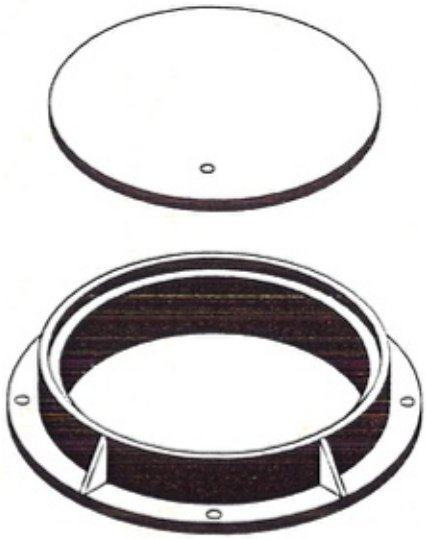

FRAME

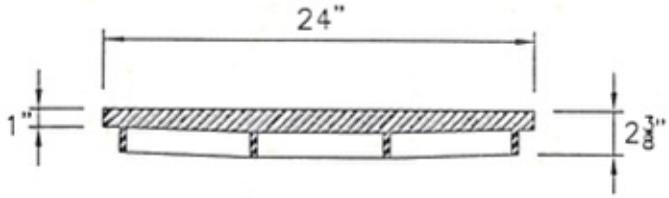

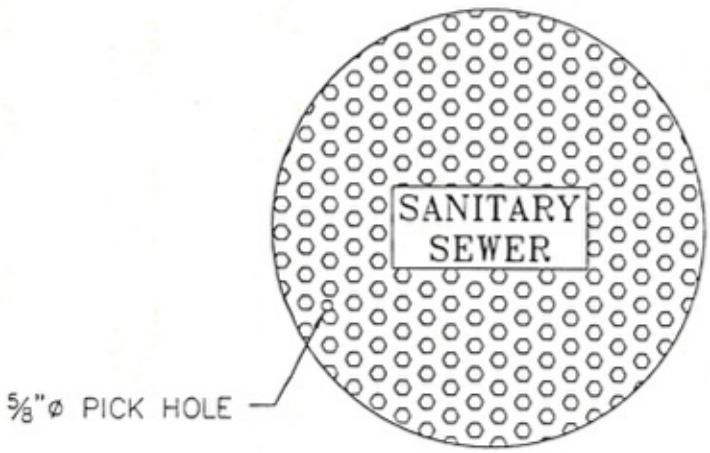

COVER

NOTE:

1. FRAME AND COVER SHALL BE MODEL NO. A-1055, AS MANUFACTURED BY D&G OR APPROVED EQUAL.

TOWN OF JACKSON WYOMING	*MANEHOLE FRAME AND COVER*	SS-108 DATE: *1/17/07*
		SCALE: *NTS*

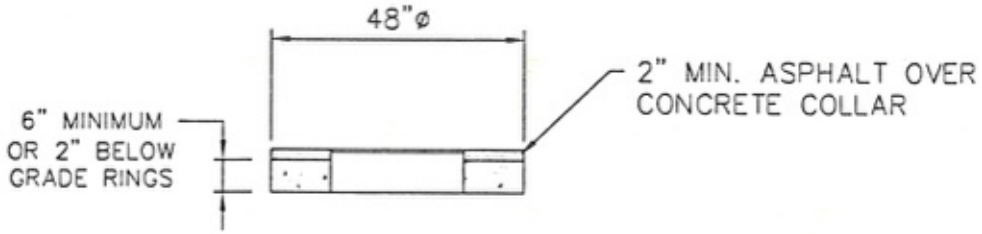

COVER AND COLLAR SECTION

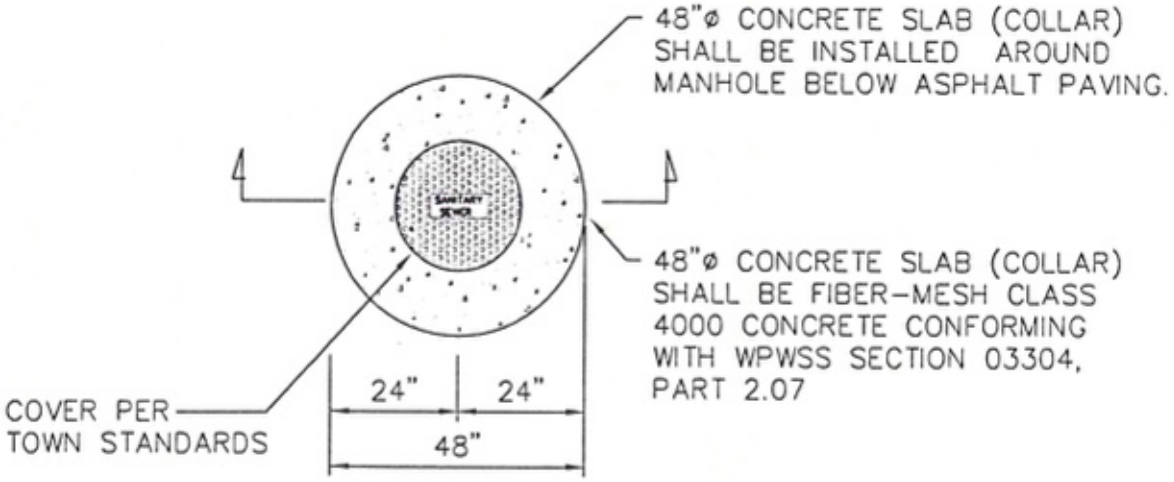

COVER AND COLLAR PLAN

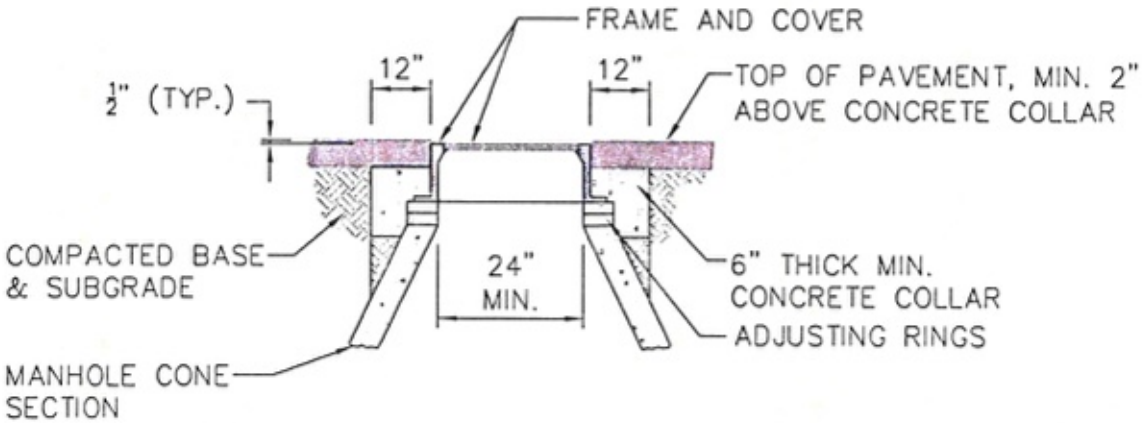

ADJUSTMENT DETAIL

NOTE:

1. ADJUST MANHOLE UPWARD WITH ADJUSTING RINGS UNDER FRAME. ADJUST MANHOLE DOWNWARD BY REMOVING A PORTION OF THE MANHOLE RISER AND REBUILDING TO PROPER HEIGHT. SLOPE MANHOLE RING AS REQUIRED TO MATCH STREET GRADE AND CROSS SLOPE. MAKE FINAL MANHOLE ADJUSTMENT AFTER PAVING AND BEFORE SEAL COATING.

TOWN OF JACKSON WYOMING	*MANHOLE ADJUSTMENT & COLLAR DETAIL FOR ASPHALT SURFACES*	SS-109 DATE: 1/17/07
		SCALE: NTS

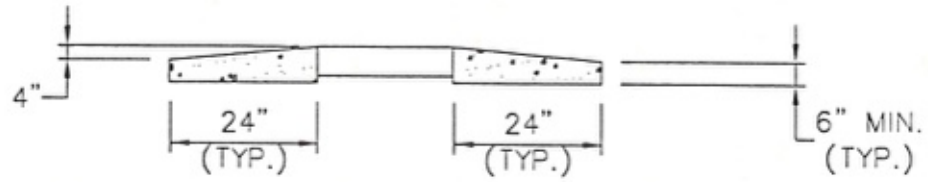

COLLAR SECTION

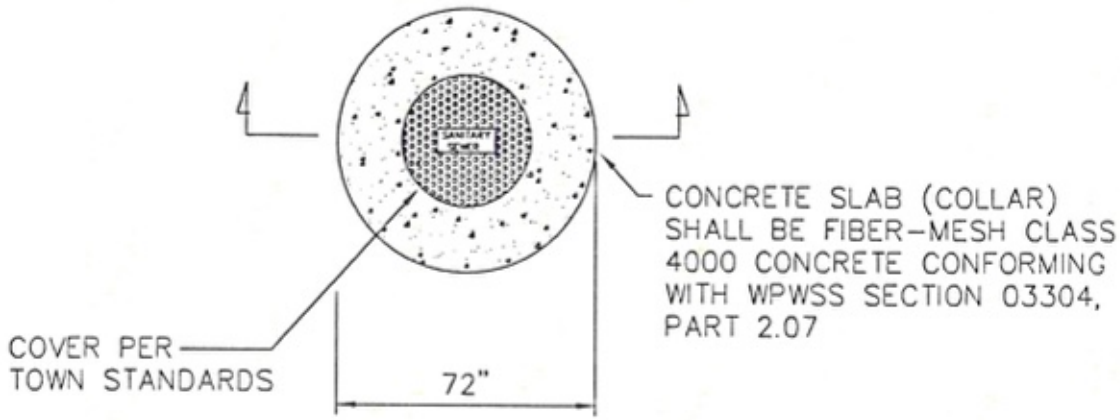

COVER AND COLLAR PLAN

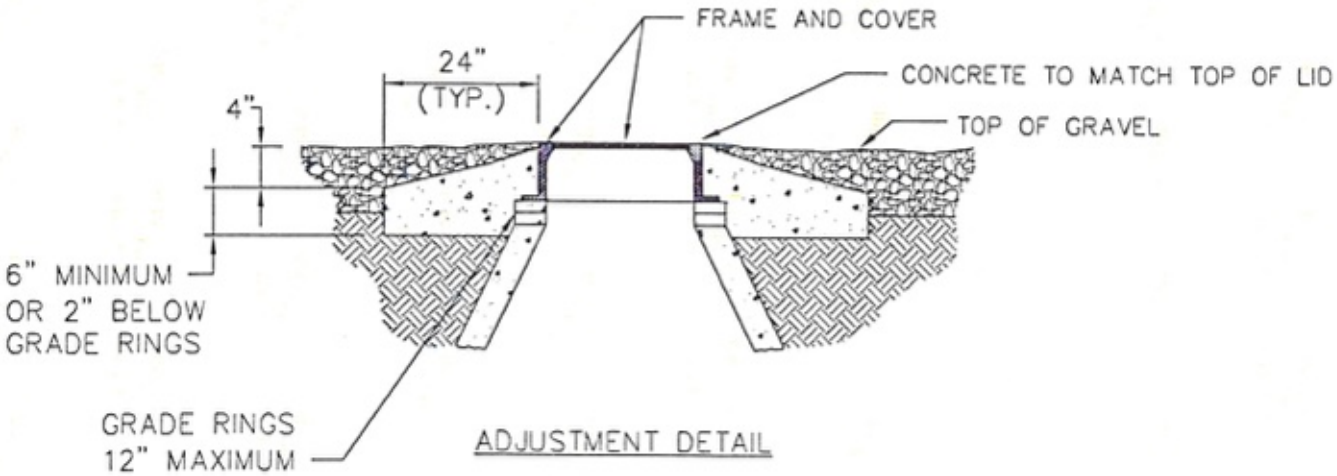

ADJUSTMENT DETAIL

NOTE:

1. ADJUST MANHOLE UPWARD WITH ADJUSTING RINGS UNDER FRAME. ADJUST MANHOLE DOWNWARD BY REMOVING A PORTION OF THE MANHOLE RISER AND REBUILDING TO PROPER HEIGHT.

	MANHOLE ADJUSTMENT AND COLLAR DETAIL FOR GRAVEL SURFACES	SS-110 DATE: 1/17/07
		SCALE: NTS

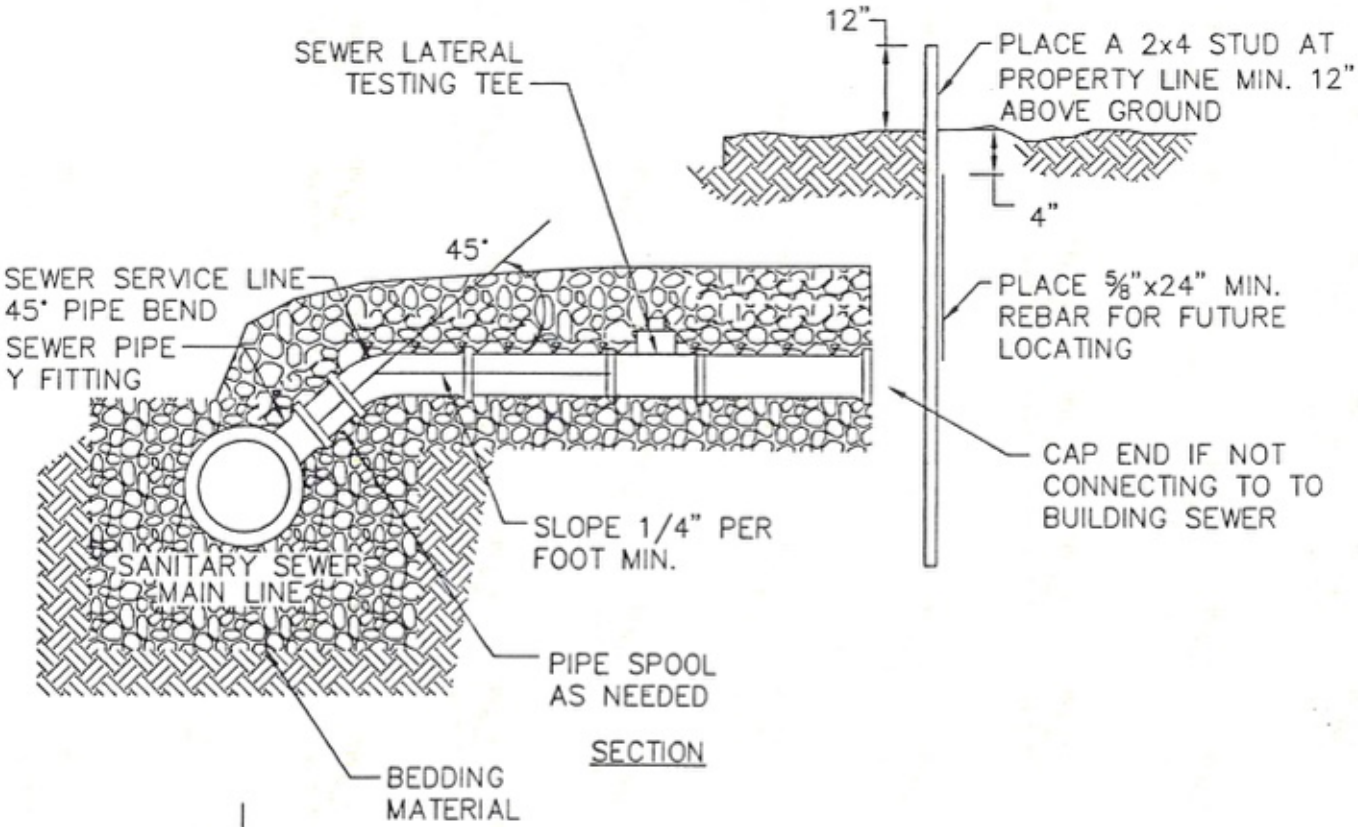

SECTION

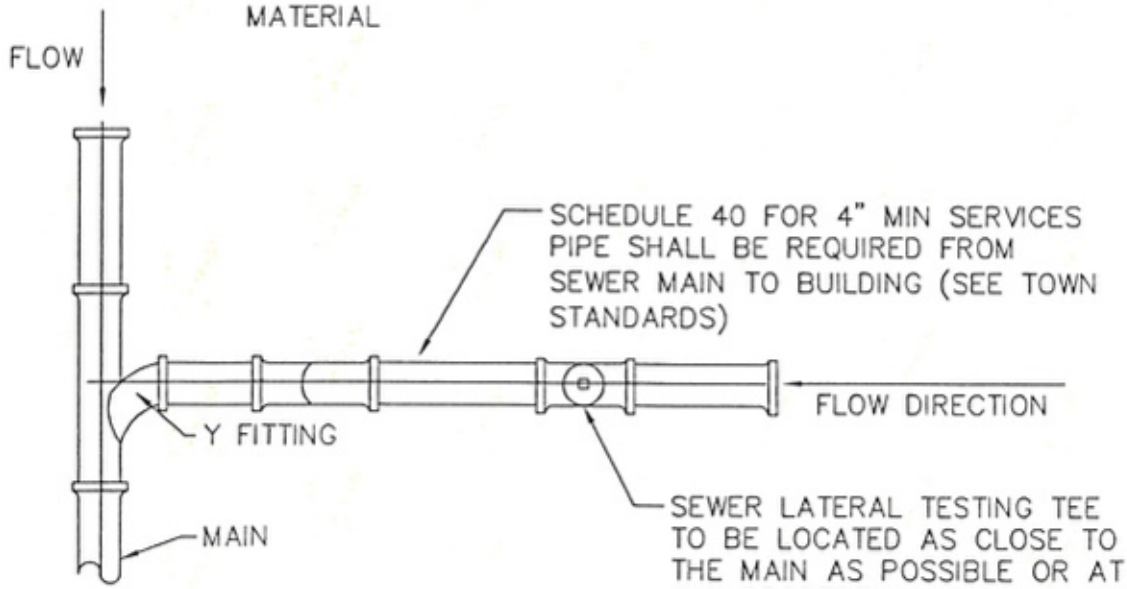

PLAN VIEW

NOTES:

1. NEW SERVICE CONNECTIONS TO EXISTING SANITARY SEWER MAINS SHALL BE COMPLETED BY TOWN OF JACKSON. THE PRIVATE PARTY BEING SERVED BY THE NEW CONNECTION SHALL BE RESPONSIBLE FOR CARRYING OUT BACKFILL OPERATIONS.
2. BACKFILL OPERATIONS AT NEW SERVICES CONNECTED TO EXISTING SANITARY SEWER MAINS SHALL BE COMPACTED PER TOWN STANDARDS.
3. CLEANOUT TO BE PROVIDED ADJACENT TO HOUSE EVERY 100' OR SERVICE LINE AND AT ALL BENDS.

TOWN OF JACKSON WYOMING	*SANITARY SEWER SERVICE LINE*	SS-111 DATE: *1/17/07*
		SCALE: *NTS*

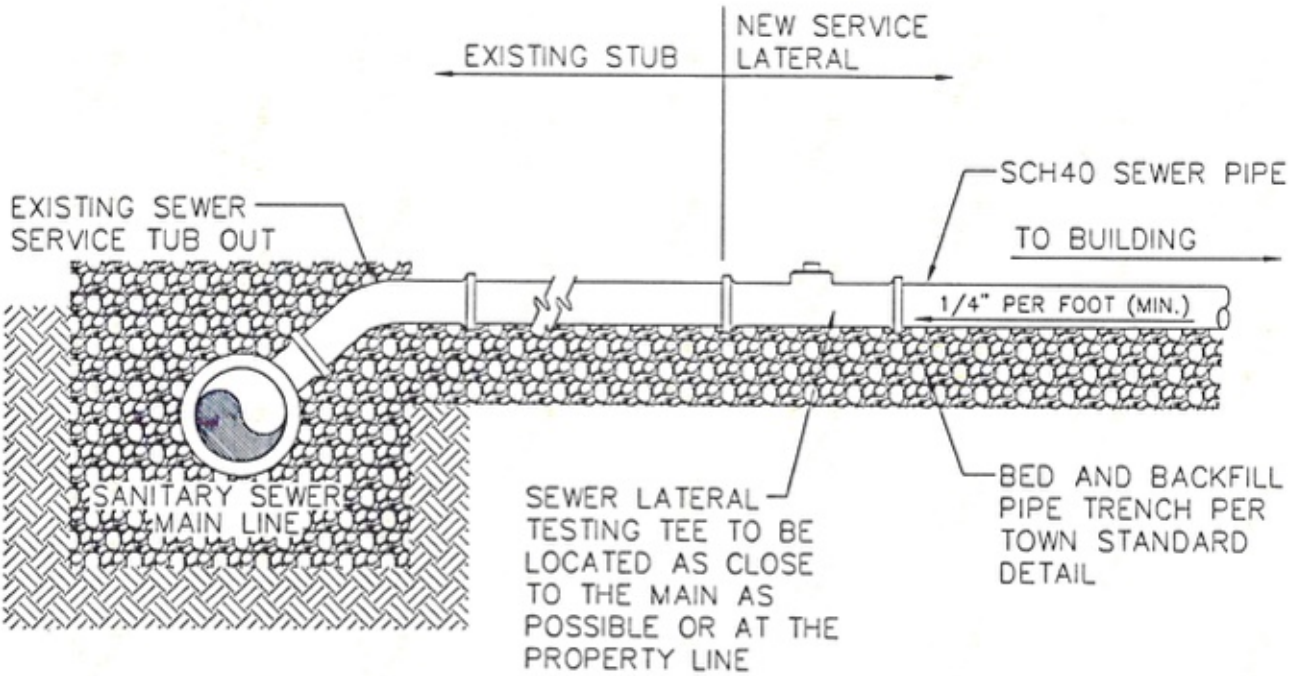

NOTES:

1. NEW SERVICE CONNECTIONS TO EXISTING SANITARY SEWER STUBS SHALL BE FIELD APPROVED BY THE TOWN OF JACKSON.

2. TRENCH SECTION AND BACKFILL OPERATIONS OF NEW SERVICE LINE SHALL BE COMPLETED PER TOWN STANDARDS. SEE DETAIL.

3. CLEANOUTS TO BE PROVIDED ADJACENT TO HOUSE, AT A MINIMUM OF 100' INTERVALS ALONG SERVICE LINE AND AT ALL BENDS.

4. PRIOR APPROVAL OF THE NEW SERVICE, THE LINE SHALL BE WATER TESTED FROM THE TESTING TEE TO THE BUILDING. WATER TEST SHALL BE WITNESS BY TOWN STAFF.

CONNECTION TO EXISTING SERVICE STUB-OUT	SS-112	DATE: *1/17/07*
	SCALE: *NTS*	

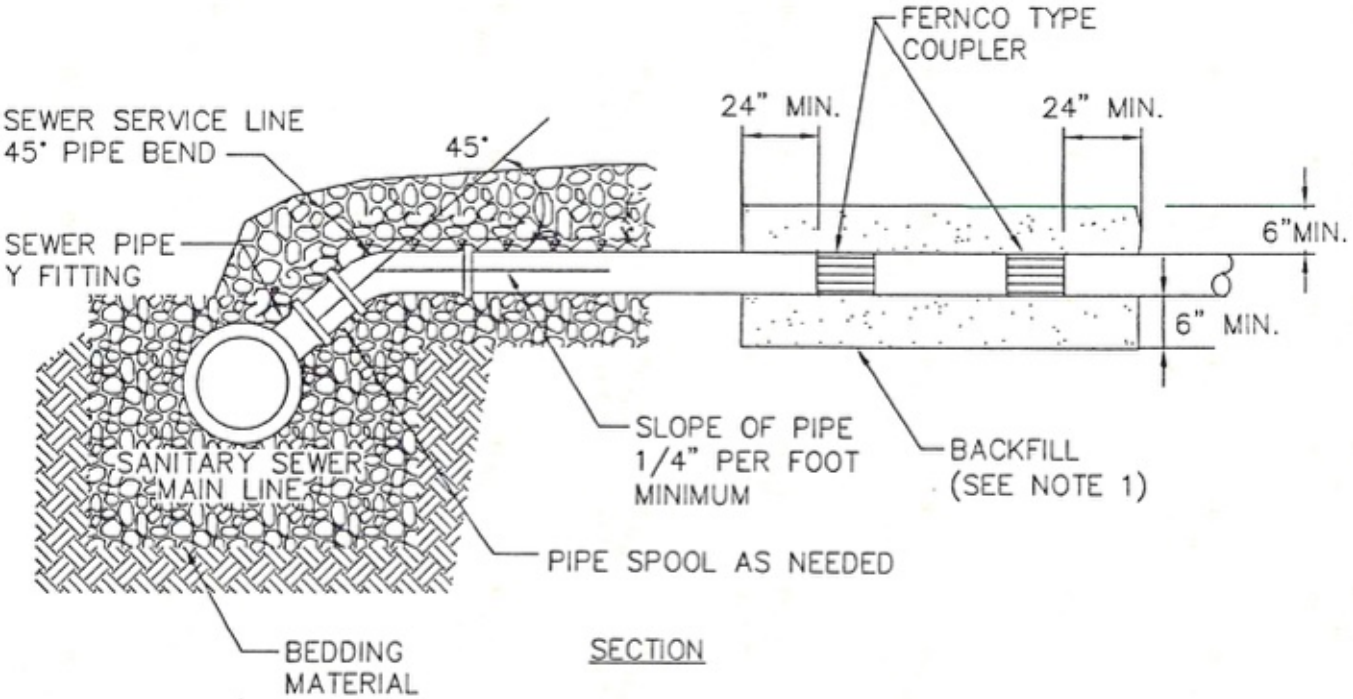

SECTION

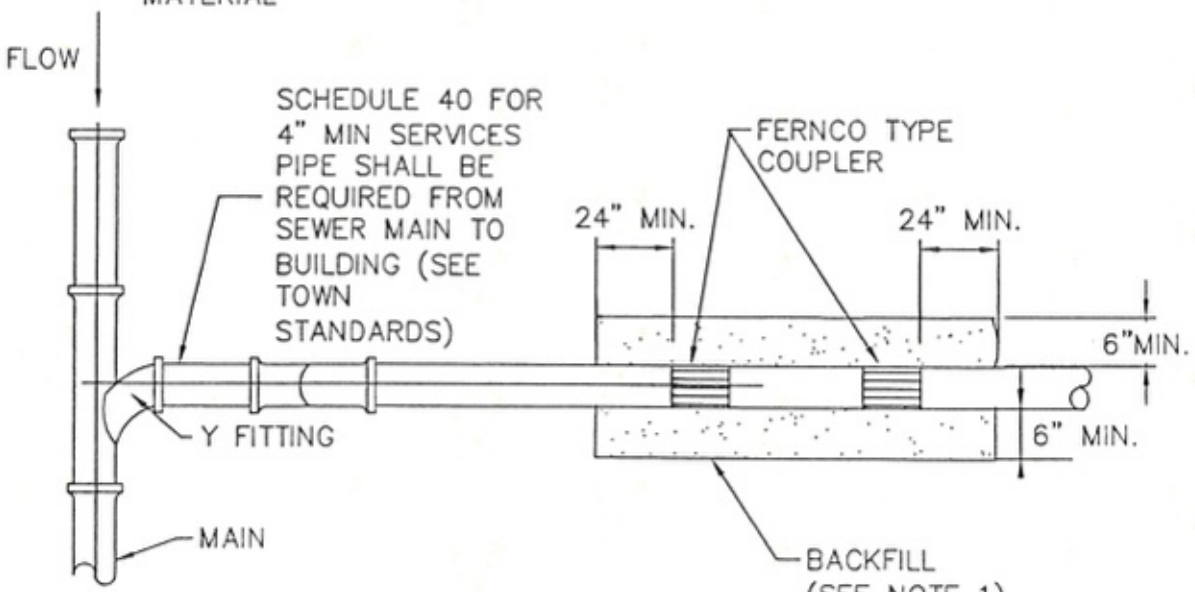

PLAN VIEW

NOTES:

1. BACKFILL OPERATIONS AT SERVICE REPAIR SHALL UTILIZE CEMENT TREATED FILL ("FLOWABLE FILL") CONFORMING TO WPWSS SECTION 02225, PART 2.01B.

SANITARY SEWER SERVICE LINE REPAIR	SS-113	DATE: *1/17/07*
	SCALE: *NTS*	

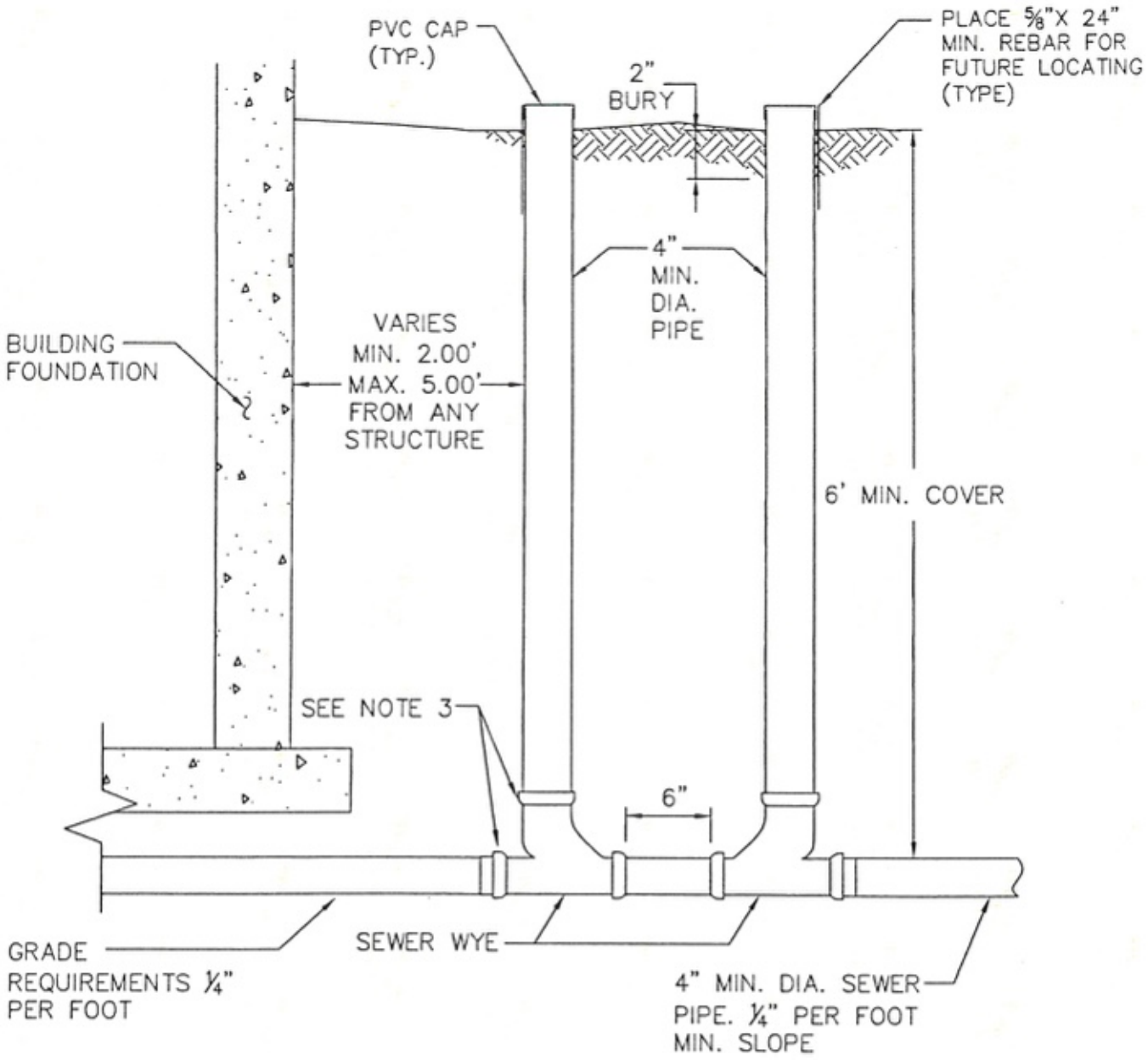

NOTES:

1. PRIOR TO BACKFILL THE TOWN PUBLIC WORKS DEPARTMENT MUST INSPECT ALL PIPE, FITTINGS, COUPLINGS GRADE AND COMPLETE WATER TESTING.
2. INSTALL AND COMPACT ALL BACKFILL MATERIAL PER TOWN PUBLIC WORKS DEPARTMENT STANDARD SPECIFICATIONS AND AS SHOWN WITHIN THE TRENCH DETAIL.
3. ALL PVC FITTINGS SHALL MEET ASTM D3034 SPECIFICATIONS, AND SHALL ALSO MEET ASTM D312 SPECIFICATIONS FOR RUBBER GASKETED BELL AND SPIGOT TYPE WITH INTEGRAL BELL.

SERVICE LATERAL BUILDING CLEANOUT	SS-114	DATE: 1/17/07
	SCALR: NTS	

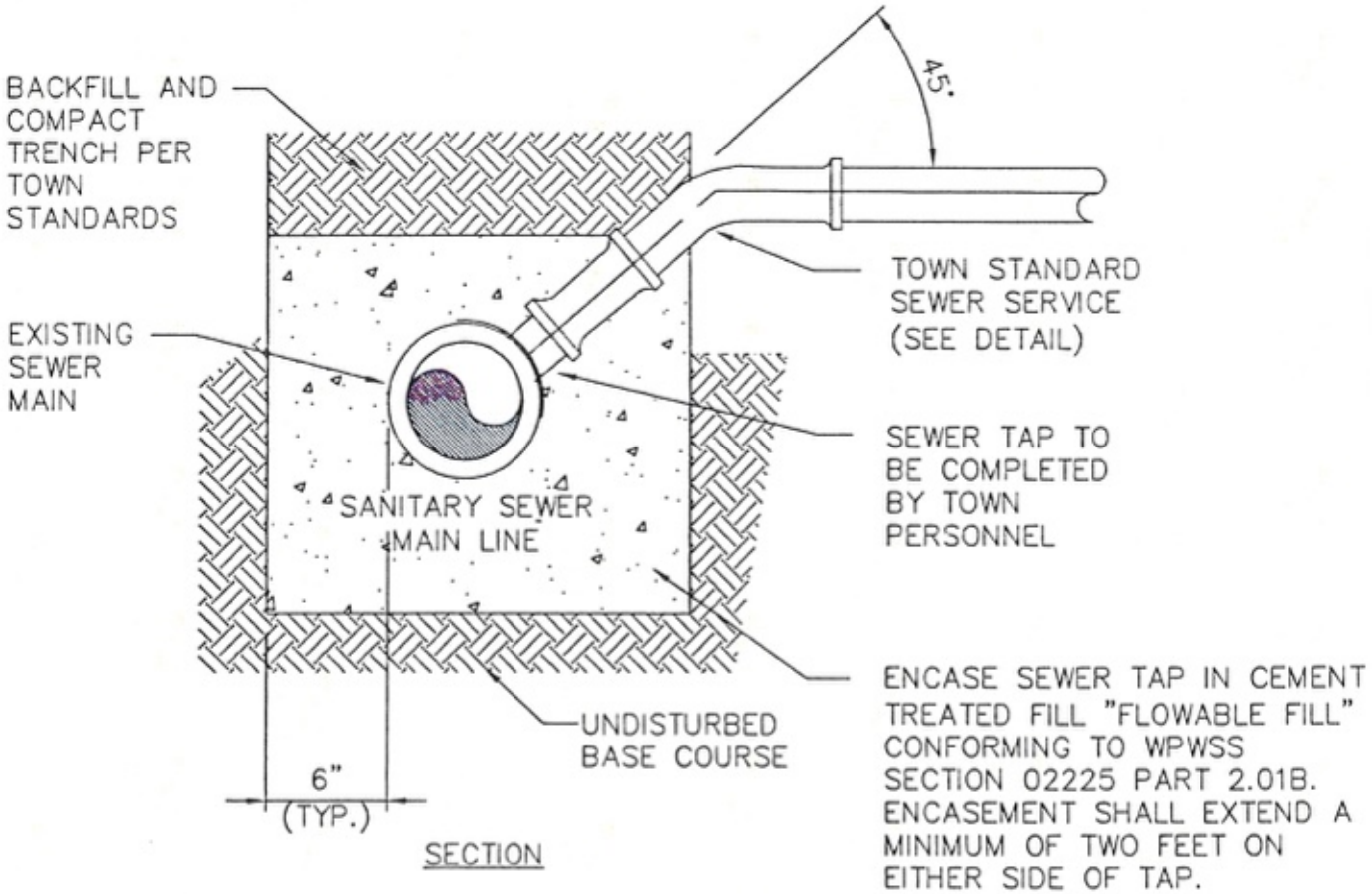

SECTION

NOTES:

1. THE TOWN WILL PERFORM TAP AT THE EXPENSE OF THE OWNER. ALL OTHER WORK SHALL BE PERFORMED BY THE OWNERS/CONTRACTOR.
2. THE TOWN SHALL PERFORM TAP ONLY WITHIN TRENCHES WHICH MEET OR EXCEED THE STANDARDS SET BY OSHA. THE TOWN RESERVES THE RIGHT TO REQUIRE ADDITIONAL TRENCH EXCAVATIONS BE COMPLETED SHOULD IT BE DETERMINED BY TOWN PERSONNEL THAT THE TRENCH IS NOT IN COMPLIANCE WITH OSHA STANDARDS.

SEWER MAIN TAPPING	SS-115	DATE: *1/17/07*
	SCALE: *NTS*	

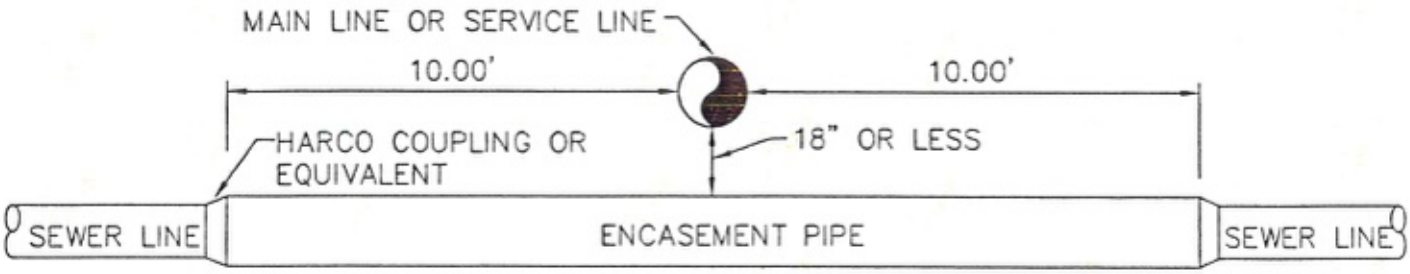

SLEEVING DETAIL TO BE APPROVED BY TOWN

SEWER LINE–SIDE VIEW
FOR PERPENDICULAR CROSSINGS

NOTE:

1. IF WATER LINE IS 18" OR LESS ABOVE SEWER OR IF WATER IS ANY DISTANCE BELOW THE SEWER LINE, INSTALL C–900 PVC PRESSURE PIPE OR TOWN APPROVED EQUAL. PRESSURE PIPE MUST EXTEND UNTIL THE LINES ACHIEVE THE REQUIRED SEPARATION AS MEASURED FROM EXTERIOR WALL TO EXTERIOR WALL, OR THE JOINTS OF THE SEWER LINE ARE OFFSET BY 10 FEET HORIZONTALLY FROM THE CENTER OF THE WATER LINE.

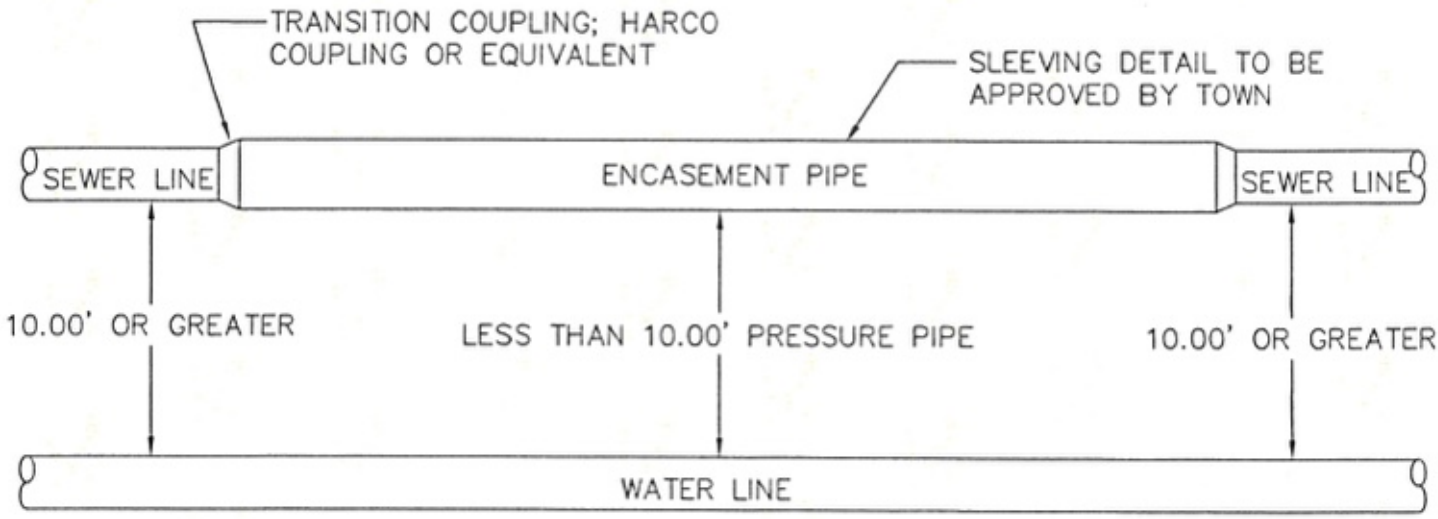

SEWER LINE–TOP VIEW
FOR PARALLEL LINES

NOTE:

1. IF WATER LINE IS 18" OR LESS ABOVE SEWER LINE OR IF WATER LINE AND SEWER LINE COME WITHIN 10 FEET HORIZONTALLY, THEN THE INSTALLED SEWER LINE IS TO BE CONSTRUCTED OF C–900 PVC PRESSURE PIPE OR TOWN APPROVED EQUAL PIPE. PRESSURE PIPE MUST EXTEND UNTIL THE WATER AND SEWER PIPE ARE SEPARATED BY MORE THAN 10 FEET HORIZONTALLY AND OR MORE THAT 18" VERTICALLY.
2. IF APPROVED SEWER PRESSURE PIPE IS INSTALLED,ENCASEMENT PIPE MAY NOT BE REQUIRED AT DISTANCES LESS THAN 10 FEET.

TOWN OF JACKSON WYOMING	*SEWER PIPE ENCASEMENT*	SS–116 DATE: *1/17/07*
		SCALE: *NTS*

Storm Sewer Details

2008

STM-100….Storm Sewer Pipe Trench

STM-101….Curb Hood Inlet Details

STM-102….Storm Drain Parking Lot Inlet

STM-103….Storm Drain Manhole Adjustment and Collar

STM-104….Storm Drain Manhole Frame and Cover

STM-105….Frame Grate and Plaque Details

STM-106….Straw Bale Details

STM-107….Silt Fence Details

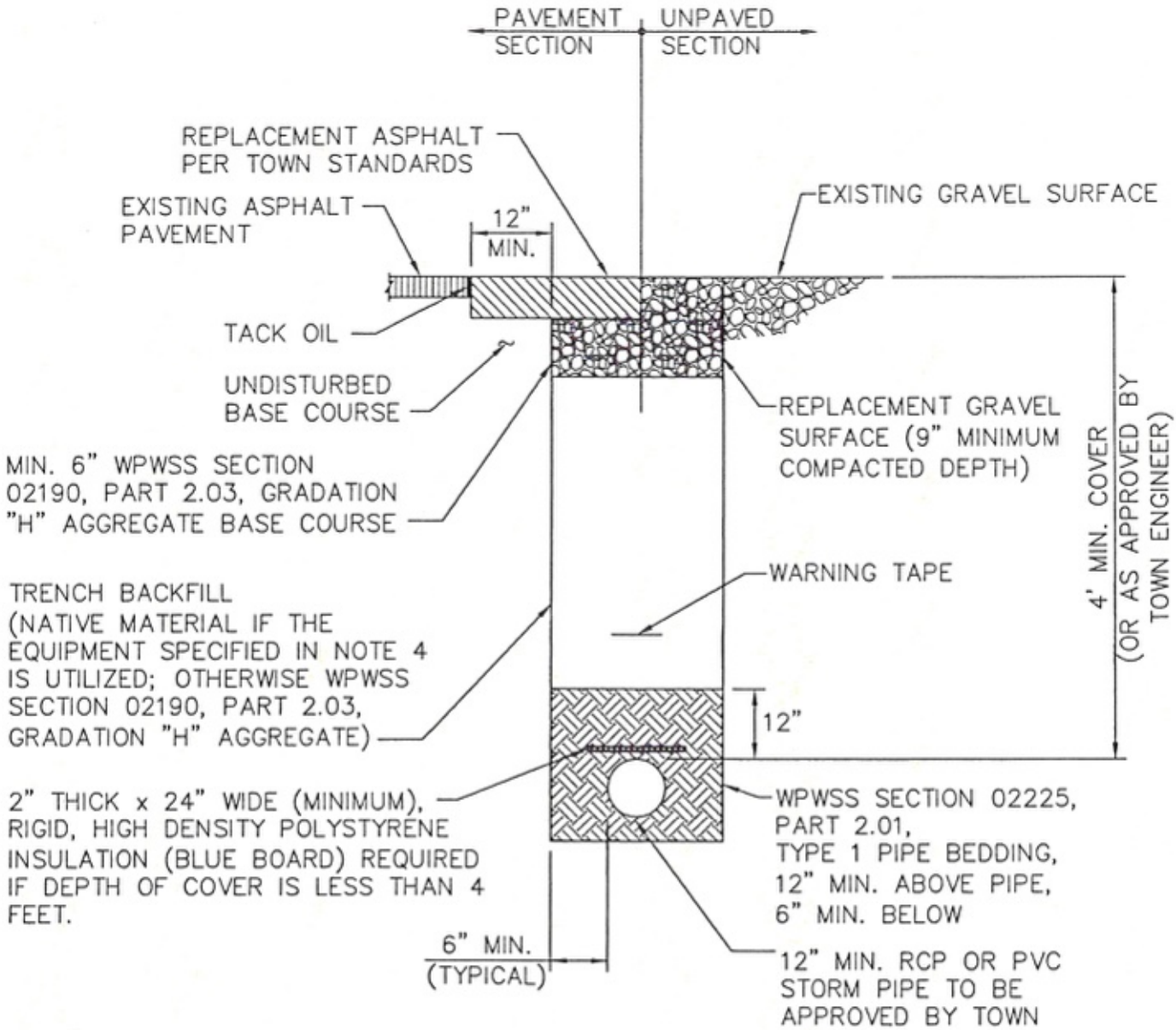

NOTES:

1. TRENCH BACKFILL BELOW THE SURFACE SHALL MEET THE FOLLOWING CRITERIA:
   - 95% MODIFIED PROCTOR DENSITY WITHIN STREET AND ALLEY RIGHTS-OF-WAY.
   - 90% MODIFIED PROCTOR DENSITY OUTSIDE STREET AND ALLEY RIGHTS-OF-WAY.
2. COMPACTION OF TRENCH BACKFILL SHALL BE CARRIED OUT WITH A HOE-PACK OR A SHEEPS FOOT ROLLER ON A BACK-HOE ARM.
3. PIPE BEDDING SHALL BE PLACED IN 6" LIFTS AND THOROUGHLY COMPACTED TO PROVIDE UNIFORM PIPE SUPPORT.
4. ALL TRENCH EXCAVATION SHALL CONFORM TO WYOMING OCCUPATIONAL HEALTH AND SAFETY ADMINISTRATION (WOSHA) REGULATIONS.

TOWN OF JACKSON WYOMING	*STORM SEWER PIPE TRENCH*	STM-100 DATE: *1/17/07*
		SCALE: *NTS*

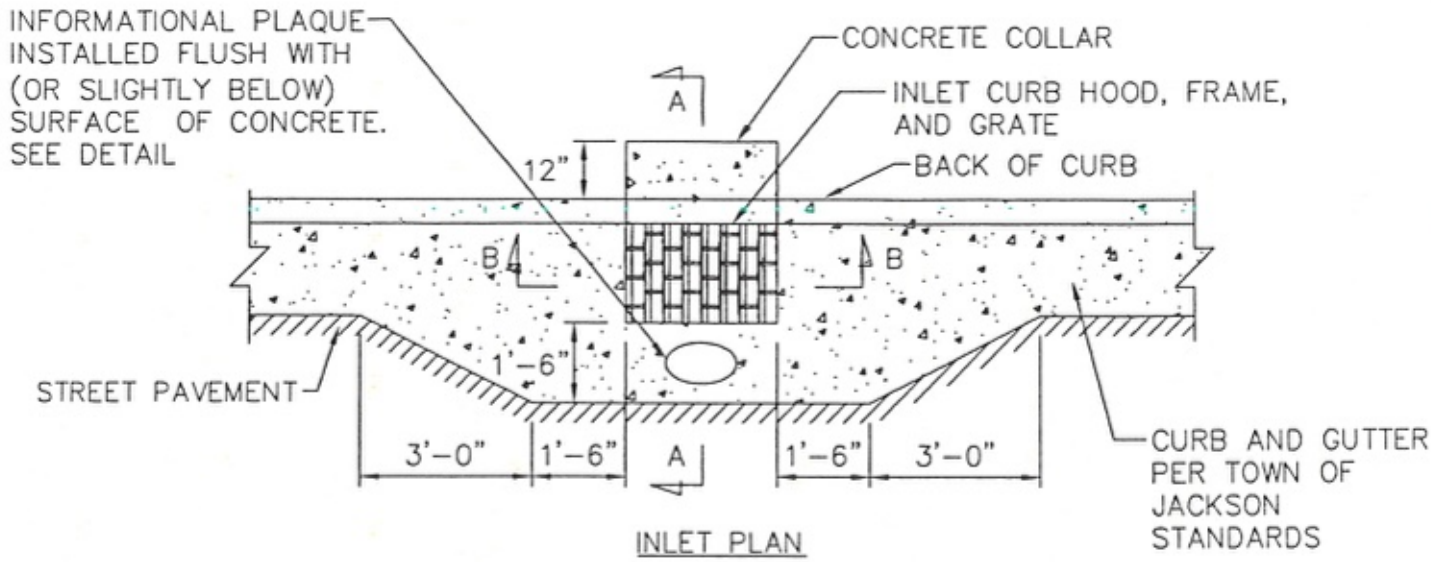

INLET PLAN

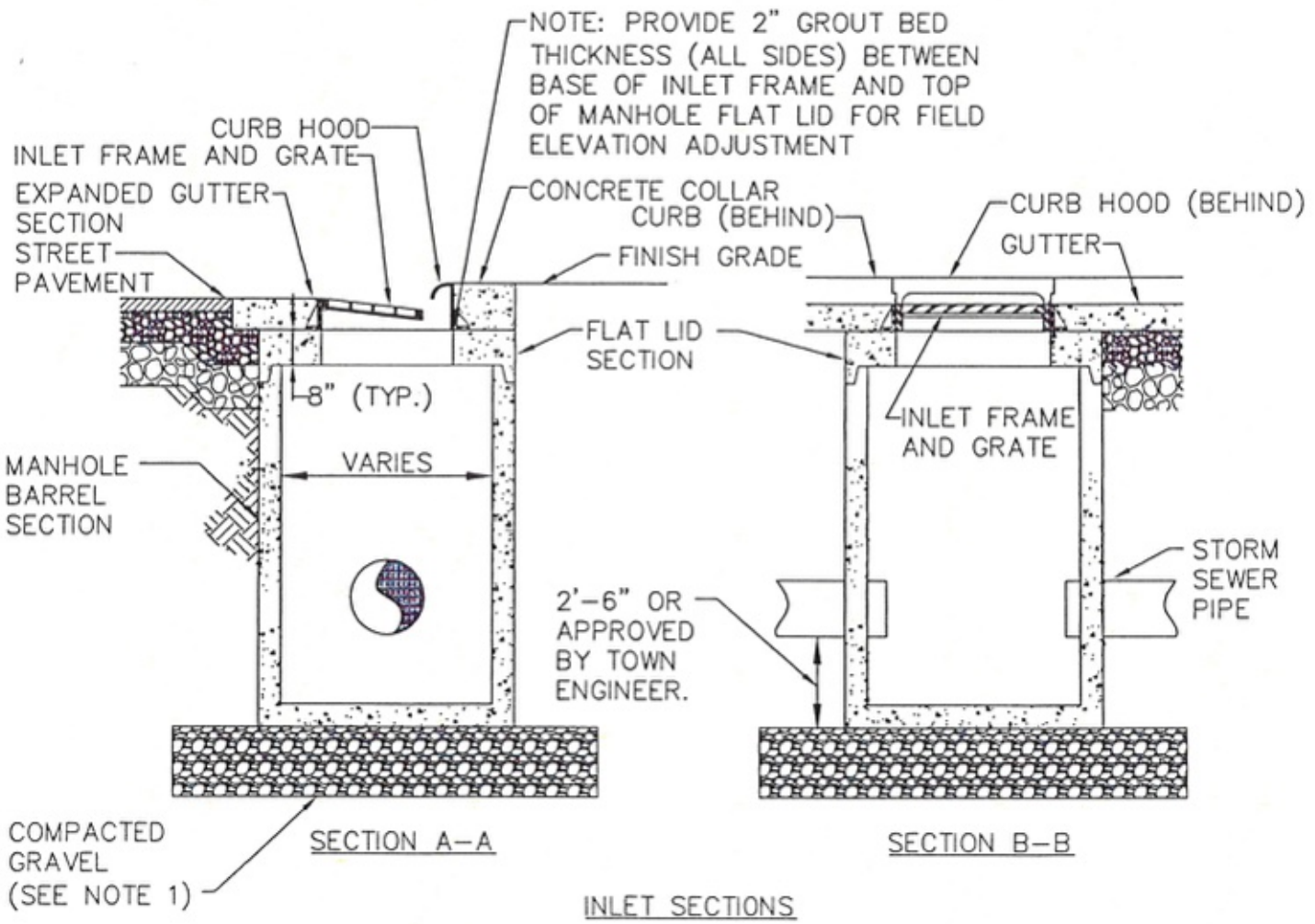

INLET SECTIONS

NOTES:

1. GRAVEL SHALL BE EIGHT INCH MINIMUM THICKNESS, CONFORM TO WPWSS SECTION 02190, PART 2.03, GRADING H, AND BE INSTALLED PER WPWSS SECTION 02231, PART 3.03.

TOWN OF JACKSON WYOMING	*CURB HOOD INLET DETAILS*	STM-101 DATE: *1/17/07*
		SCALE: *NTS*

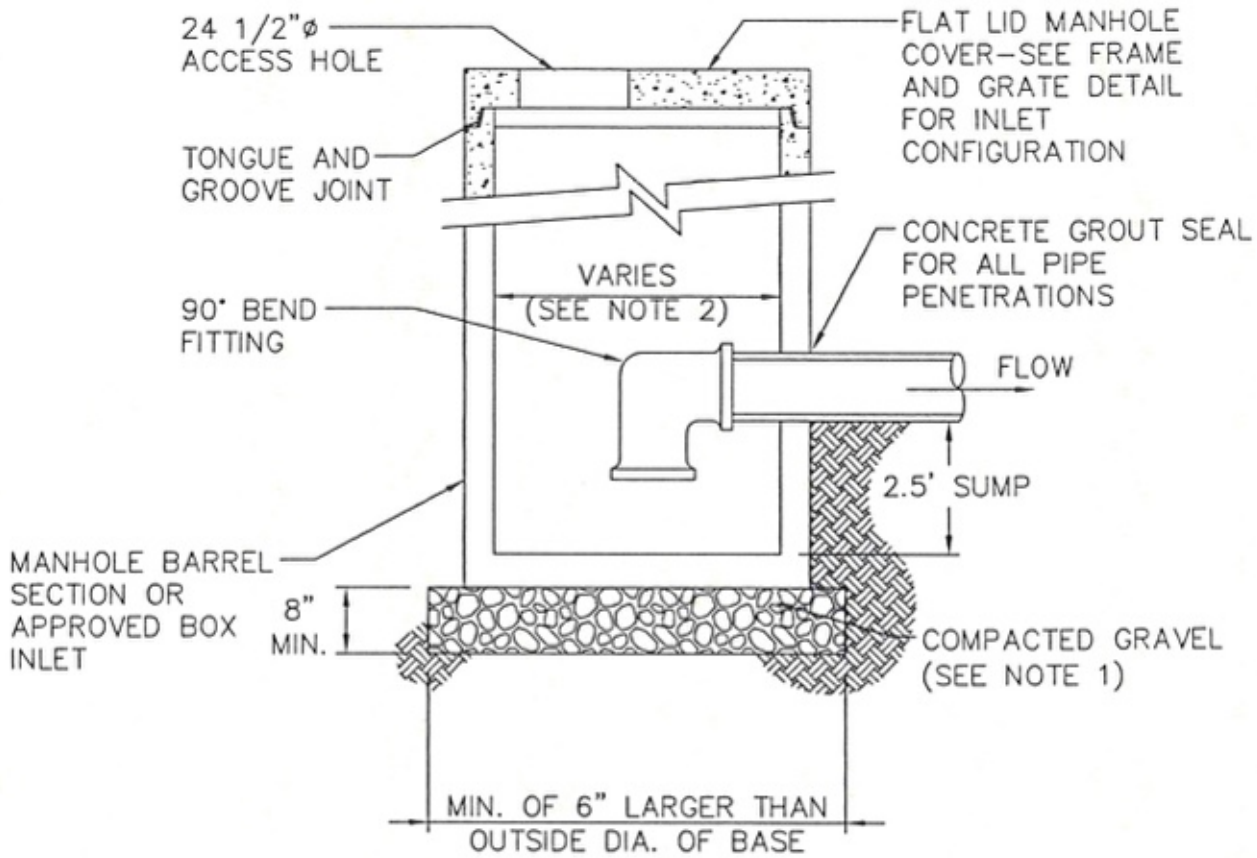

NOTES:

1. GRAVEL SHALL BE EIGHT INCH MINIMUM THICKNESS, CONFORM TO WPWSS SECTION 02190, PART 2.03, GRADING H, AND BE INSTALLED PER WPWSS SECTION 02231, PART 3.03.
2. ALL DIMENSIONS TO BE APPROVED BY THE TOWN PUBLIC WORKS DEPARTMENT.
3. MANHOLE COVER SHALL BE DESIGNED FOR H20S LOADING.
4. SEE DETAIL FOR CAST IRON FRAME AND COVER.
5. SEE ADJUSTMENT AND COLLAR DETAIL.

	STORM DRAIN PARKING LOT INLET	STM–102 DATE: *1/17/07*
		SCALE: *NTS*

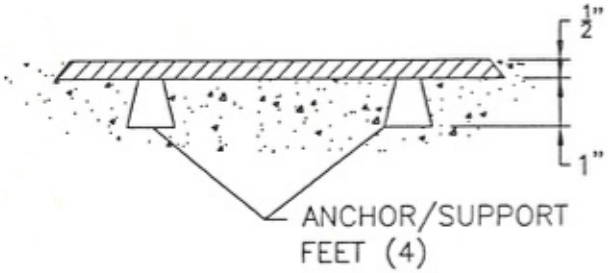

SECTION

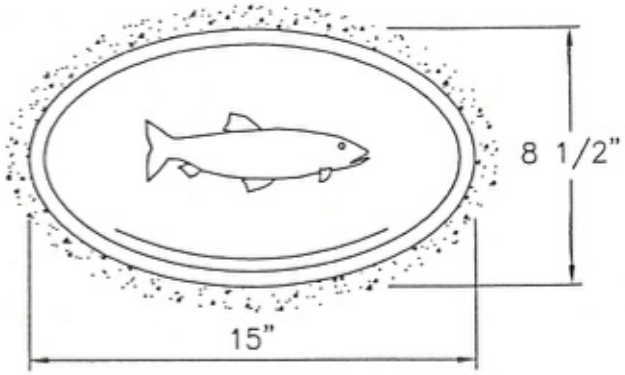

PLAN

INFORMATIONAL PLAQUE DETAILS

NOTE:
PLAQUE SHALL BE SUBSTANTIALLY AS SHOWN, AS SUPPLIED BY D&L SUPPLY OF LINDON, UTAH, OR APPROVED SUBSTITUTE.

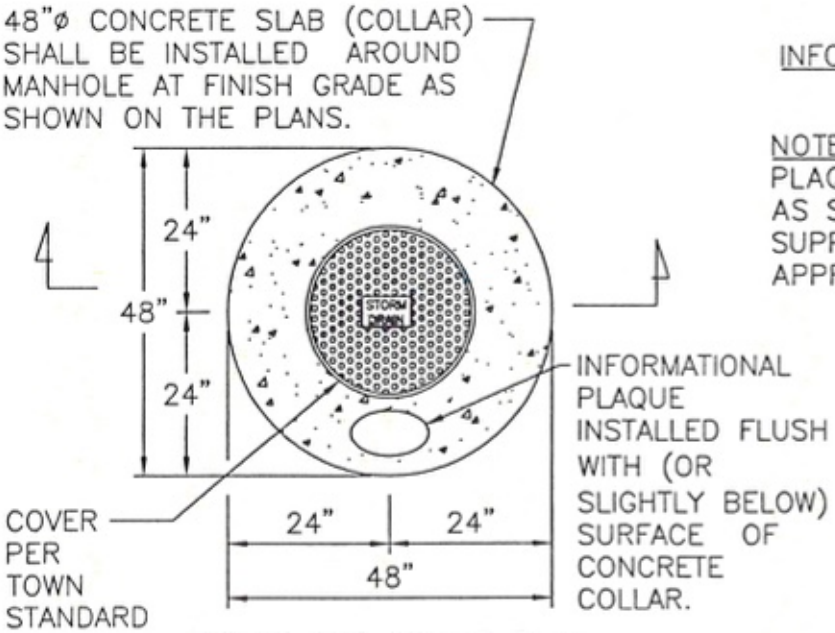

COVER AND COLLAR PLAN

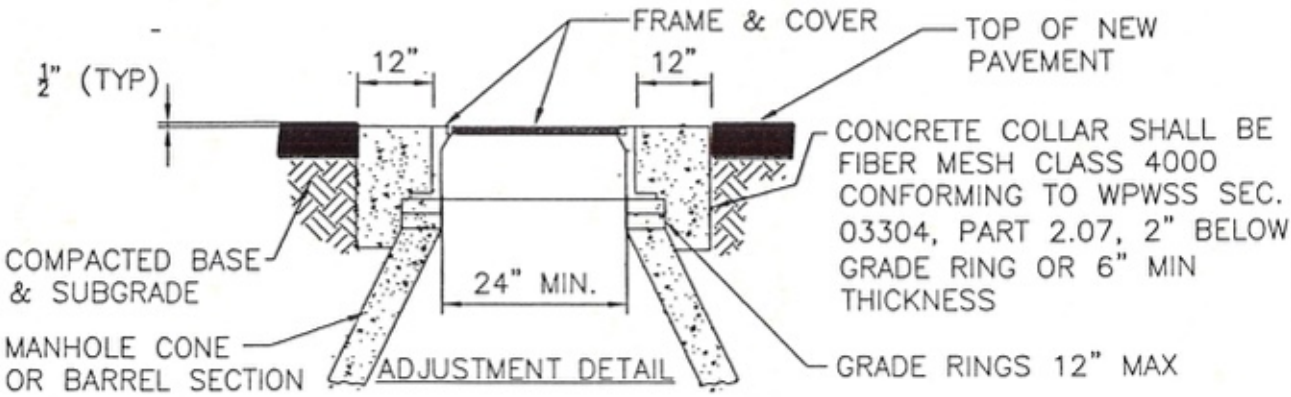

ADJUSTMENT DETAIL

NOTES:

1. ADJUST MANHOLE UPWARD WITH ADJUSTING RINGS UNDER FRAME. ADJUST MANHOLE DOWNWARD BY REMOVING A PORTION OF THE MANHOLE RISER AND REBUILDING TO PROPER HEIGHT. SLOPE MANHOLE RING AS REQUIRED TO MATCH STREET GRADE AND CROSS SLOPE. MAKE FINAL MANHOLE ADJUSTMENT AFTER PAVING AND BEFORE SEAL COATING.
2. IF STORM DRAIN IS WITHIN UNPAVED AREA USE TAPERED COLLAR. SEE TOWN SANIATRY SEWER DETAIL.

TOWN OF JACKSON WYOMING	*STORM DRAIN MANHOLE ADJUSTMENT AND COLLAR DETAILS*	STM-103 DATE: *1/17/07*
		SCALE: *NTS*

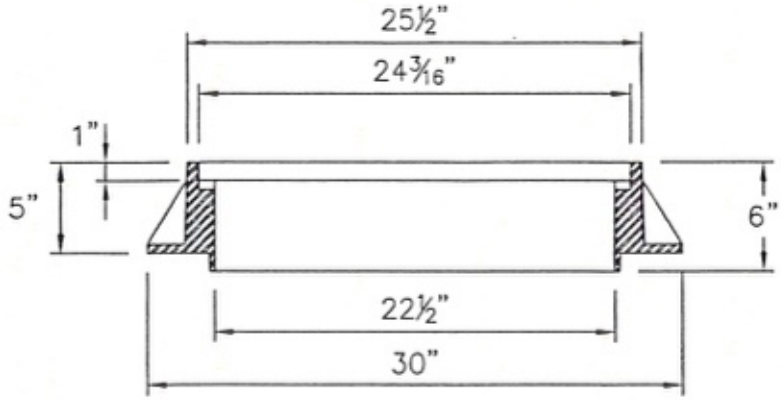

FRAME

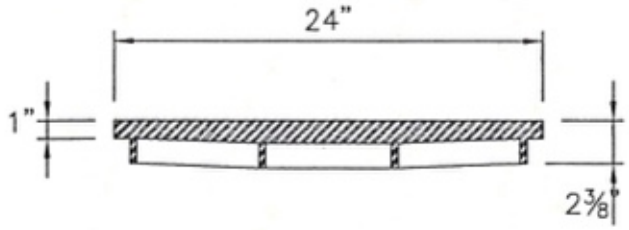

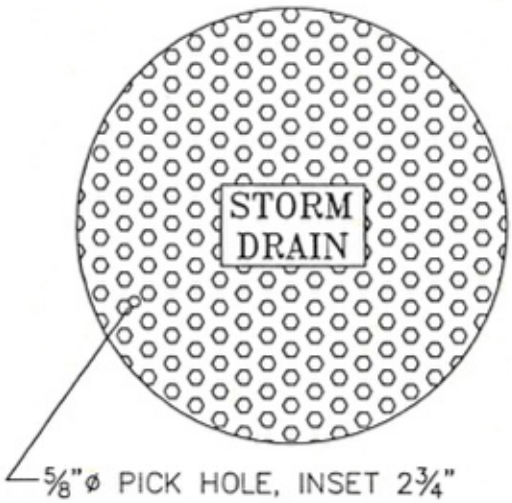

MANHOLE COVER

NOTES:

1. MANHOLE FRAME AND COVER SHALL BE MODEL NO. A–1055, AS MANUFACTURED BY D&L SUPPLY OF LINDON, UTAH, MODIFIED AS SHOWN, OR APPROVED SUBSTITUTE.

	STORM DRAIN MANHOLE FRAME AND COVER	STM–104 DATE: *1/17/07*
		SCALE: *NTS*

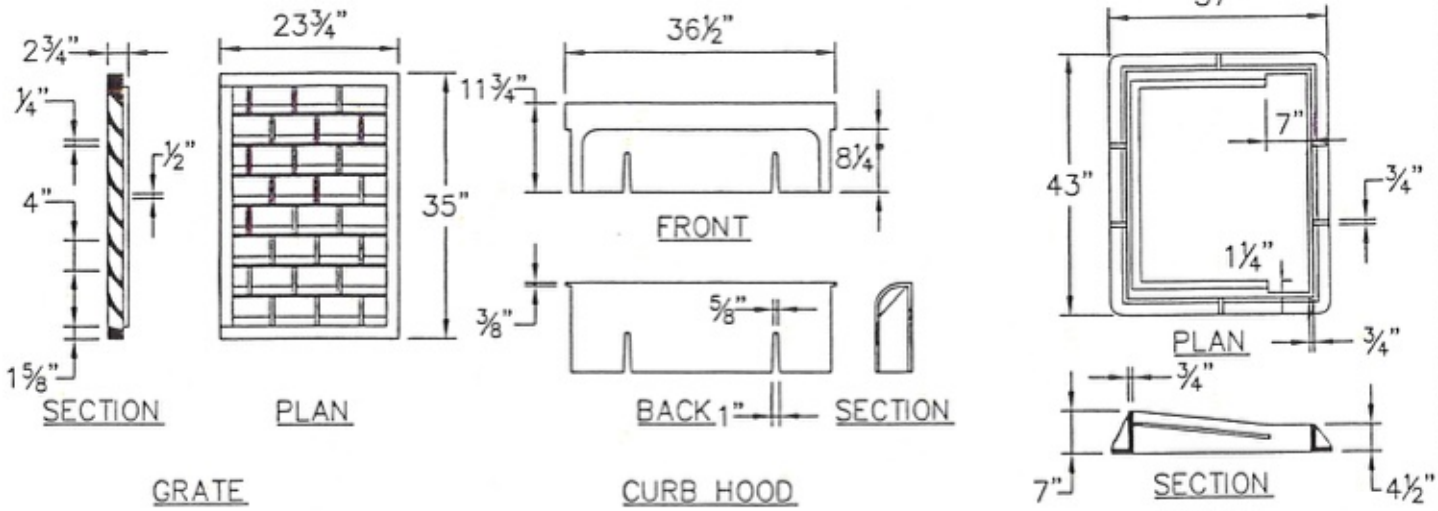

GRATE AND FRAME DETAILS

NOTE:

1. INLET GRATE AND FRAME SHALL BE MODEL NO. I-3520, AS MANUFACTURED BY D&L SUPPLY OF LINDON, UTAH, OR APPROVED SUBSTITUTE.
2. INLET GRATE SHALL BE VANED AND REVERSIBLE FOR EITHER LEFT-TO-RIGHT OR RIGHT-TO-LEFT FLOW.

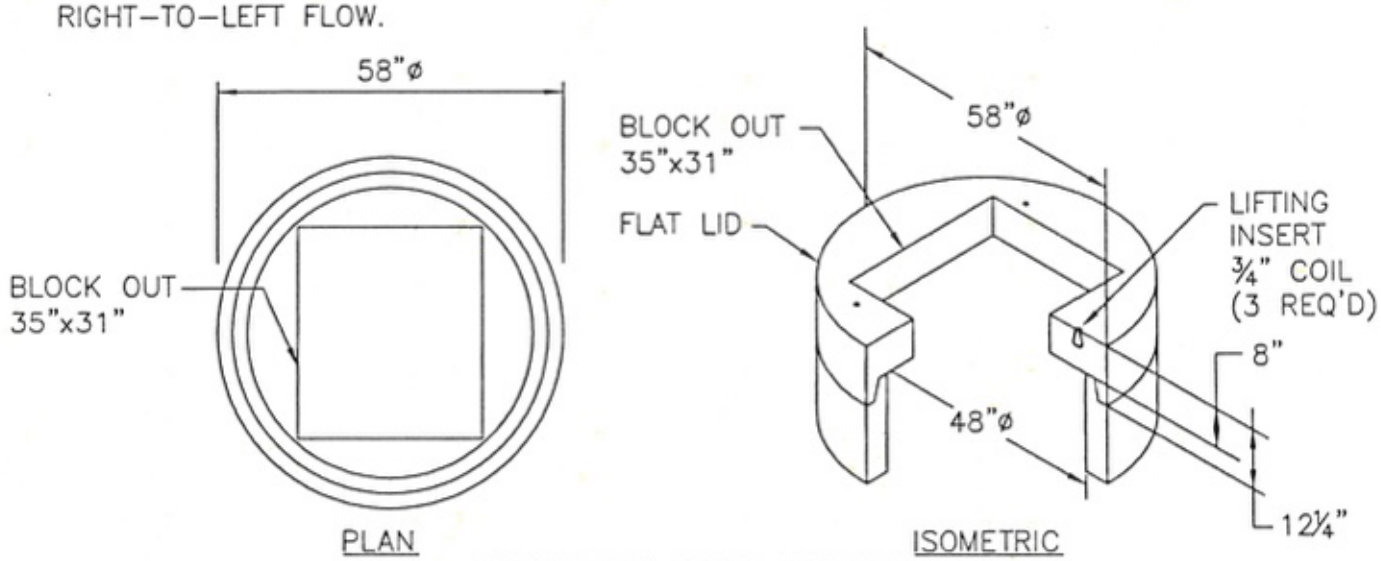

MANHOLE FLAT LID DETAILS

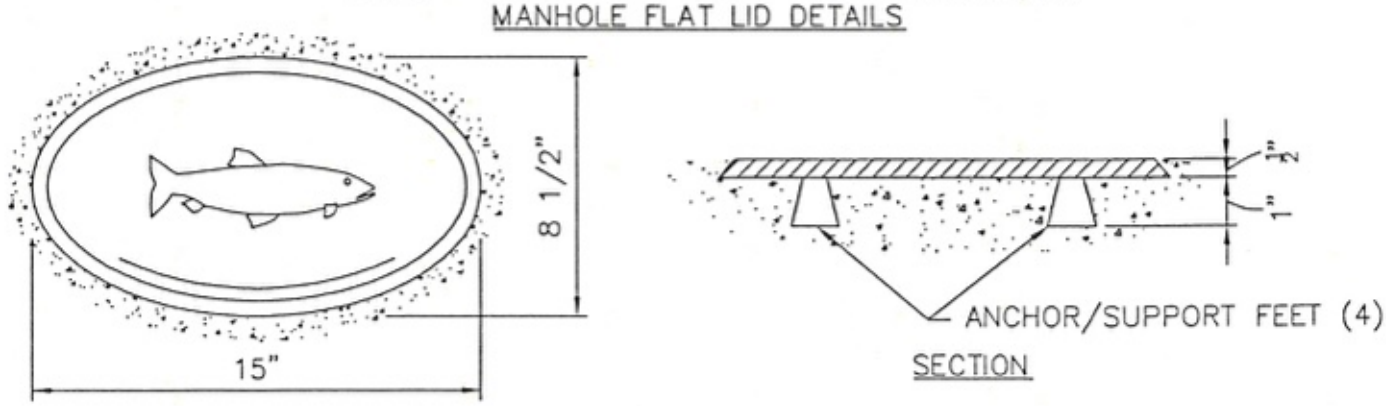

INFORMATIONAL PLAQUE DETAILS

NOTE:

PLAQUE SHALL BE SUBSTANTIALLY AS SHOWN, AS SUPPLIED BY D&L SUPPLY OF LINDON, UTAH, OR APPROVED SUBSTITUTE.

TOWN OF JACKSON WYOMING	*FRAME GRATE AND PLAQUE DETAILS*	STM-105 DATE: *1/17/07*
		SCALE: *NTS*

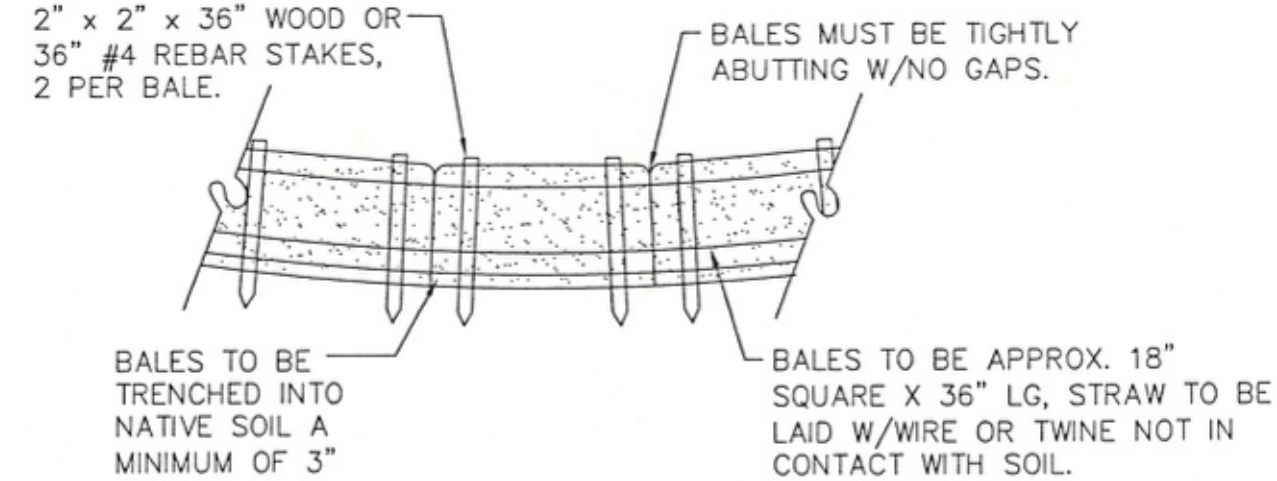

STRAW BALE BARRIER

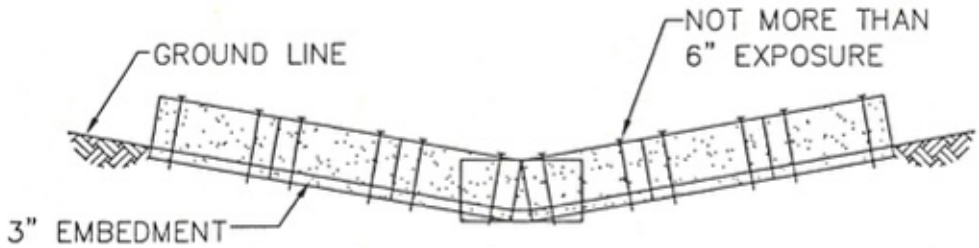

ELEVATION

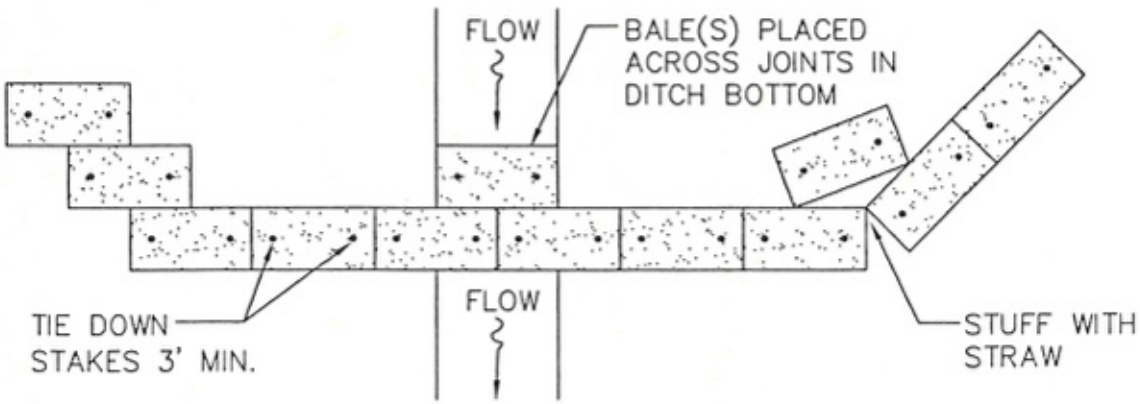

PLAN

NOTE:

TYPICAL STRAW BALE SEDIMENT FILTER

1. STRAW BALE LAYOUT MUST BE PRE-APPROVED BY THE TOWN PUBLIC WORKS DEPARTMENT.

	STRAW BALE DETAILS	STM-106 DATE: *1/17/07*
		SCALE: *NTS*

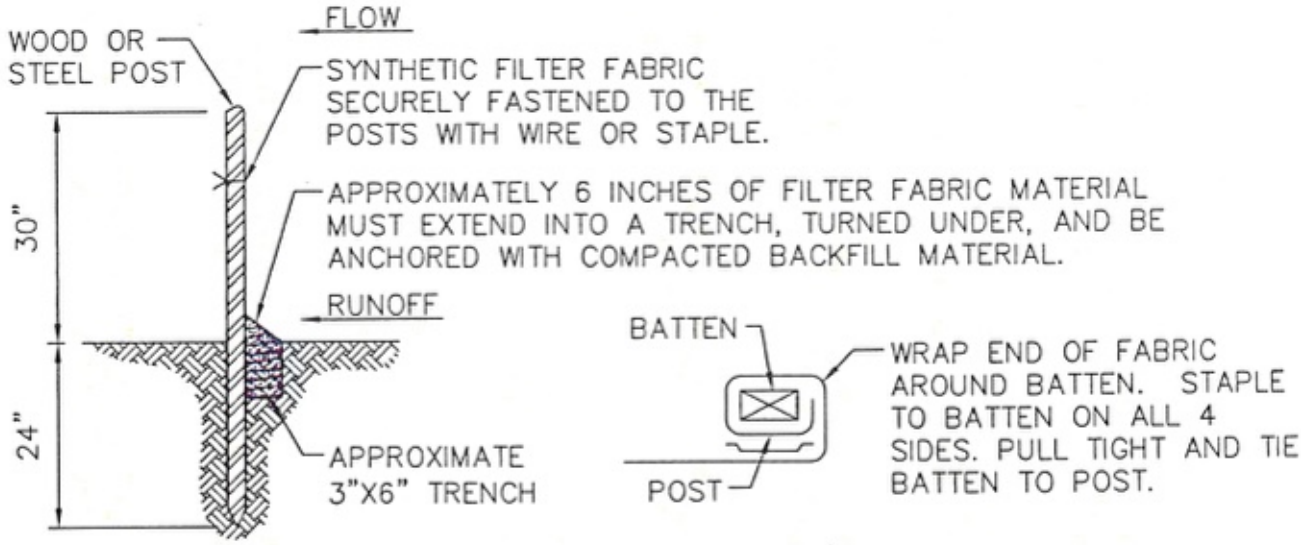

STAKING DETAIL

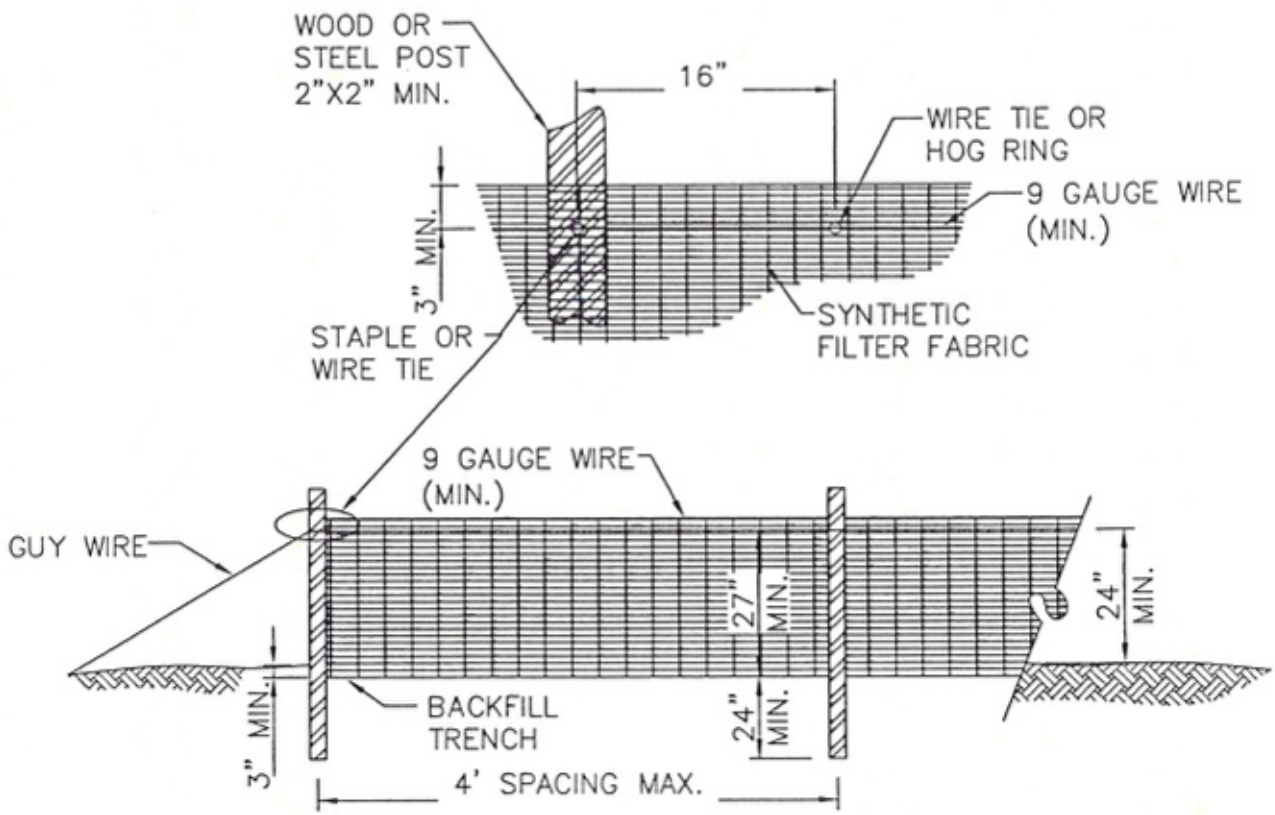

SILT FENCE

NOTE:

1. TIE WIRES TO LAP FOR LONG FENCES AND TO BE GUYED TO GROUND WITH 24"X2"X2" HARDWOOD STAKE OR TO POST BOTTOM EVERY 4 SPANS.
2. LOCATION OF SILT FENCE MUST BE PRE-APPROVED BY THE TOJ PUBLIC WORKS DEPARTMENT.

TOWN OF JACKSON WYOMING	*SILT FENCE DETAILS*	STM-107 DATE: *1/17/07*
		SCALE: *NTS*

Landscaping Details

2008

LS-100….Ground Cover Planting

LS-101….Shrub Planting

LS-102….Irrigation Line Trenching Detail

LS-103….Remote Control Valve

LS-104….Pop-Up Head

LS-105….Quick Coupler

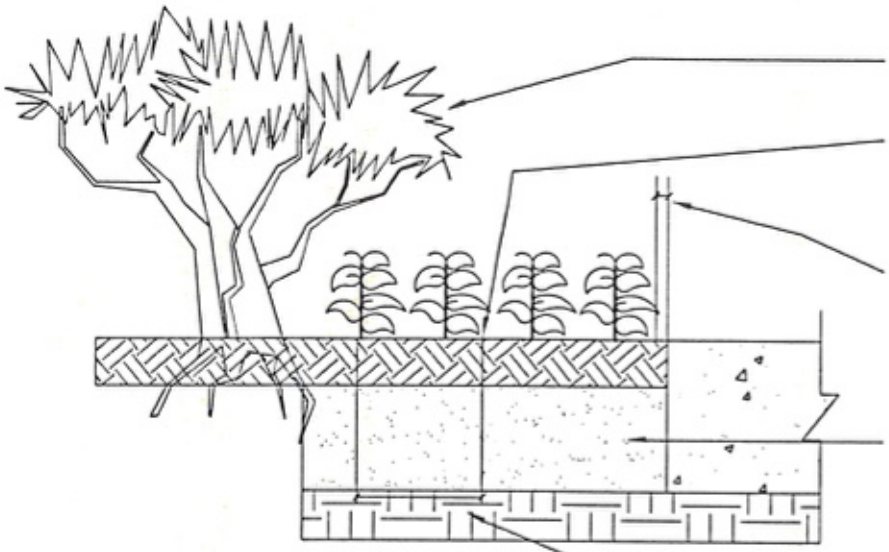

TYPICAL SHRUB CANOPY

MULCH IF REQUIRED BY NOTES AND SPECS, MINIMUM 2' DEPTH, MAXIMUM 1" SIZE.

PLANTING TO CLEAR WALK/PAVING EDGE BY 6" O.C. TO O.C. SPACING

PLANT PIT MINIMUM 4" WITH AMENDED SOIL

PLANTING TO EXTEND UNDER SHRUB TO 1/3 CANOPY

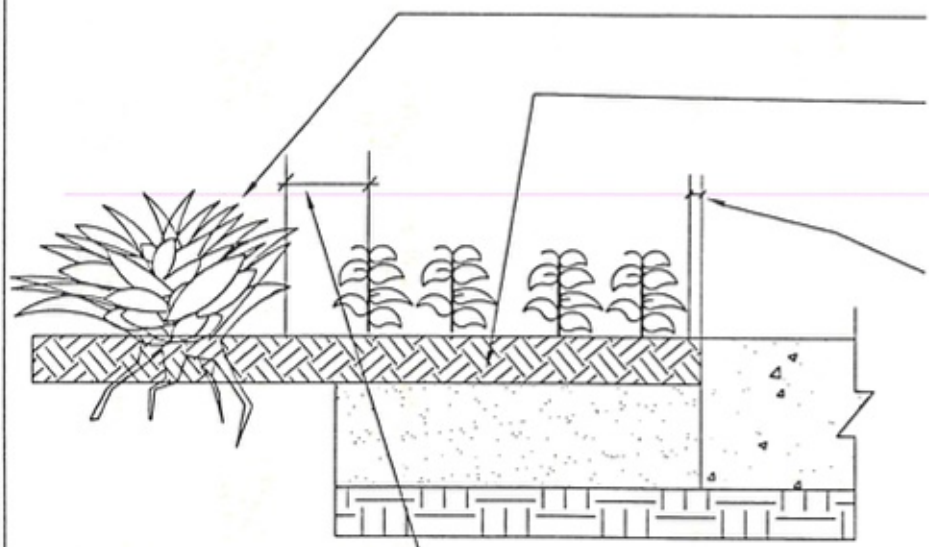

TYPICAL NON-CANOPY SRUB

MULCH IF REQUIRED BY SPECS, MINIMUM 2" DEPTH, MAXIMUM 1" SIZE.

PLANTING TO CLEAR WALK/PAVING EDGE BY 6" O.C. TO O.C. SPACING

PLANTING TO EXTEND WITHIN 6" MINIMUM FROM SHRUB CANOPY

TOWN OF JACKSON WYOMING	*GROUND COVER PLANTING*	LS-100 DATE: *1/17/07*
		SCALE: *NTS*

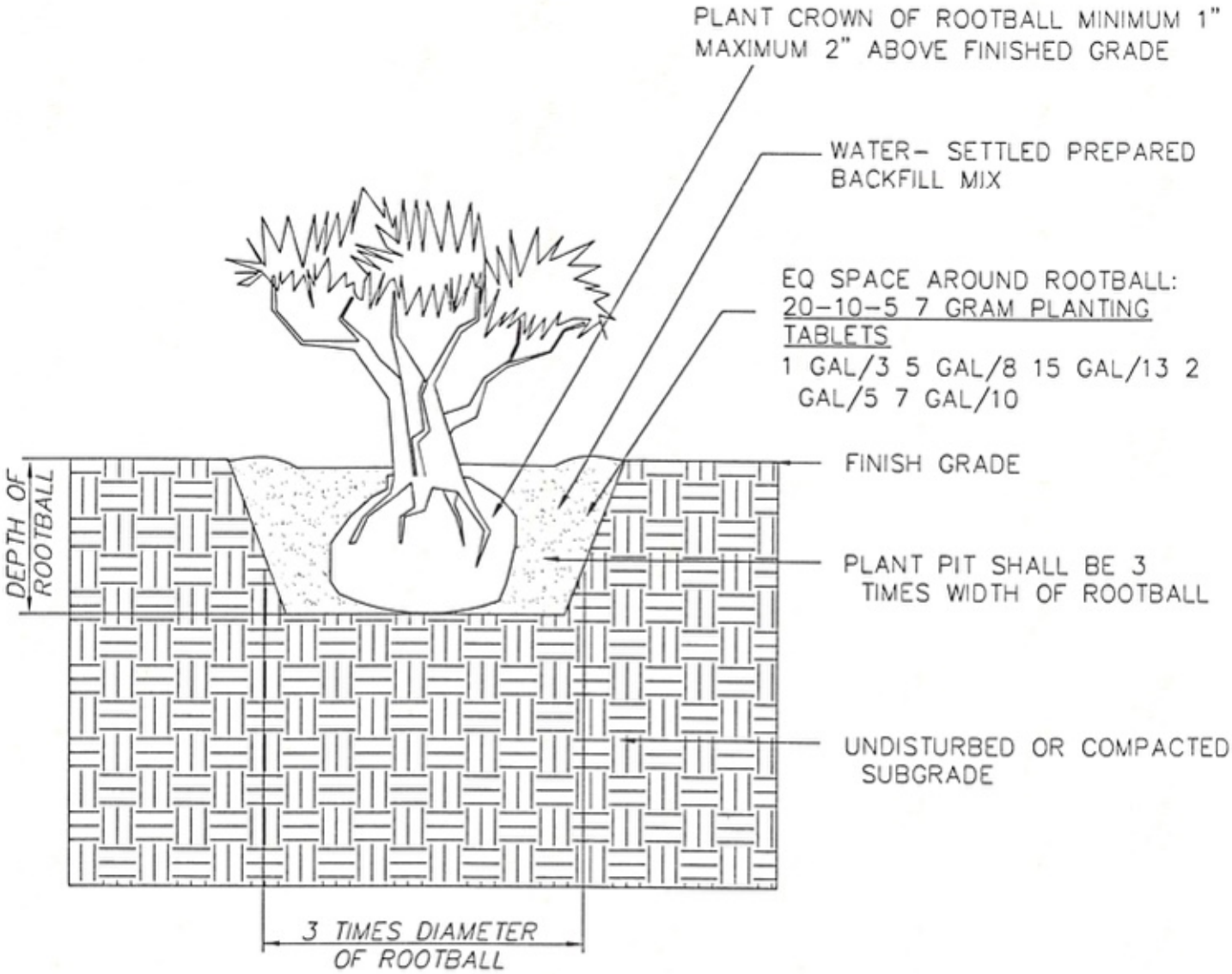

	SHRUB PLANTING	LS-101 SCALE: *1/17/07*
		SCALE: *NTS*

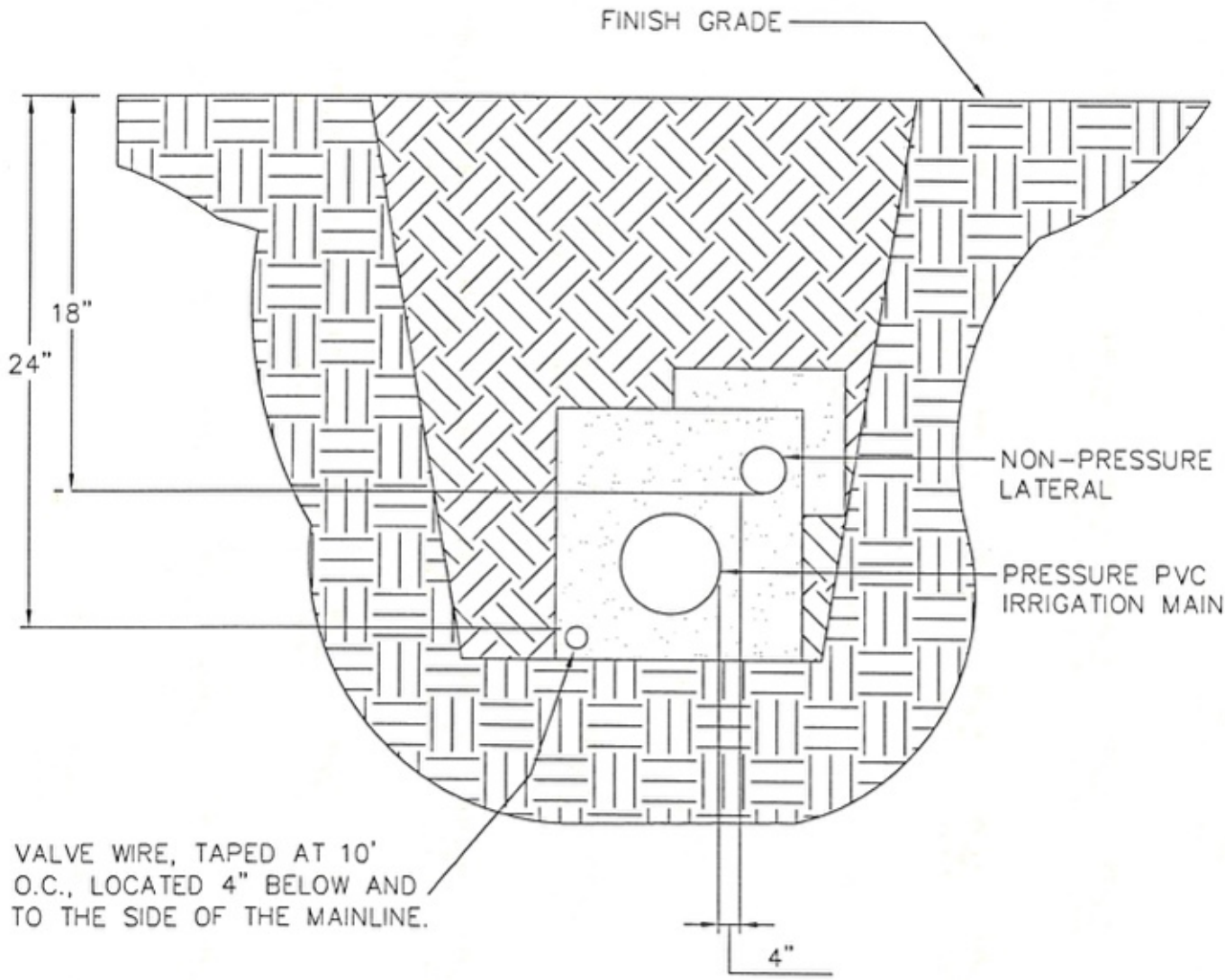

NOTE:

APPROVED TOPSOIL BACKFILL SHALL BE USED TO REPLACE ANY NATIVE MATERIAL IN EXCESS OF 1" MINUS. THERE IS TO BE A 6" PIPE ZONE OF CLEAN SAND BACK FILL AROUND ALL IRRIGATION LINES.

CONTRACTOR SHALL CONTACT PROJECT MANAGER WHEN EXISTING TREES ARE PRESENT.

TOWN OF JACKSON WYOMING	*IRRIGATION LINE TRENCHING DETAIL*	LS-102 DATE: 1/17/07
		SCALE: NTS

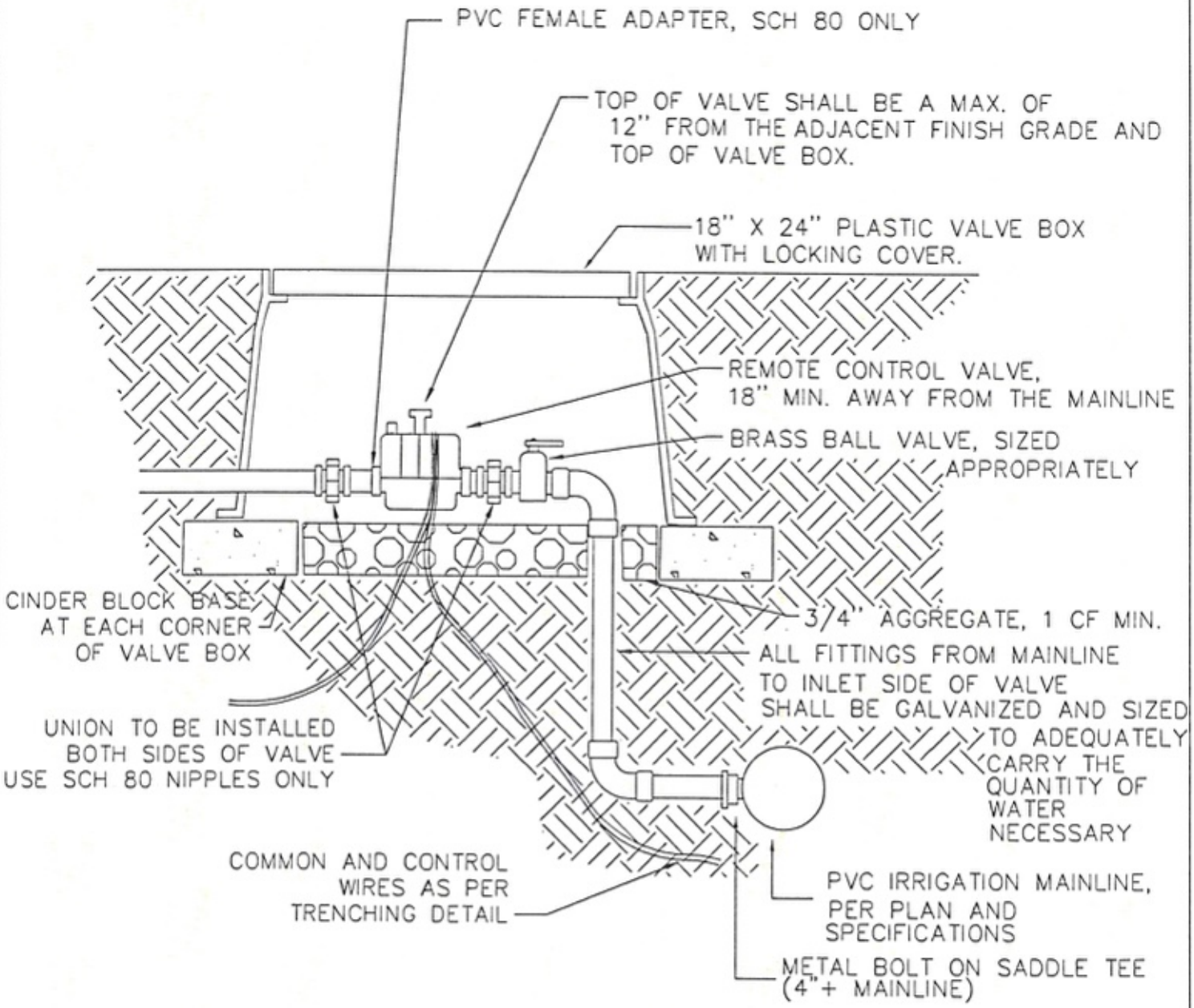

NOTES:

1. ALL WIRE SHALL BE INSTALLED PER LOCAL CODE.
2. PROVICE 12" EXPOSED COILS AT EACH WIRE CONNECTION IN VALVE BOX. (10 wRAPS ½" DIAM.)
3. CONTRACTOR SHALL USE METAL BOLT ON SADDLE TEE FOR CONNECTION TO THE IRRIGATION MAINLINE (4" + ONLY) CONNECTION SHALL BE MADE PARALLEL TO GROUND (HORIZONTAL, NOT VERTICAL)

TOWN OF JACKSON WYOMING	*REMOTE CONTROL VALVE*	LS-103 DATE: *1/17/07*
		SCALE: *NTS*

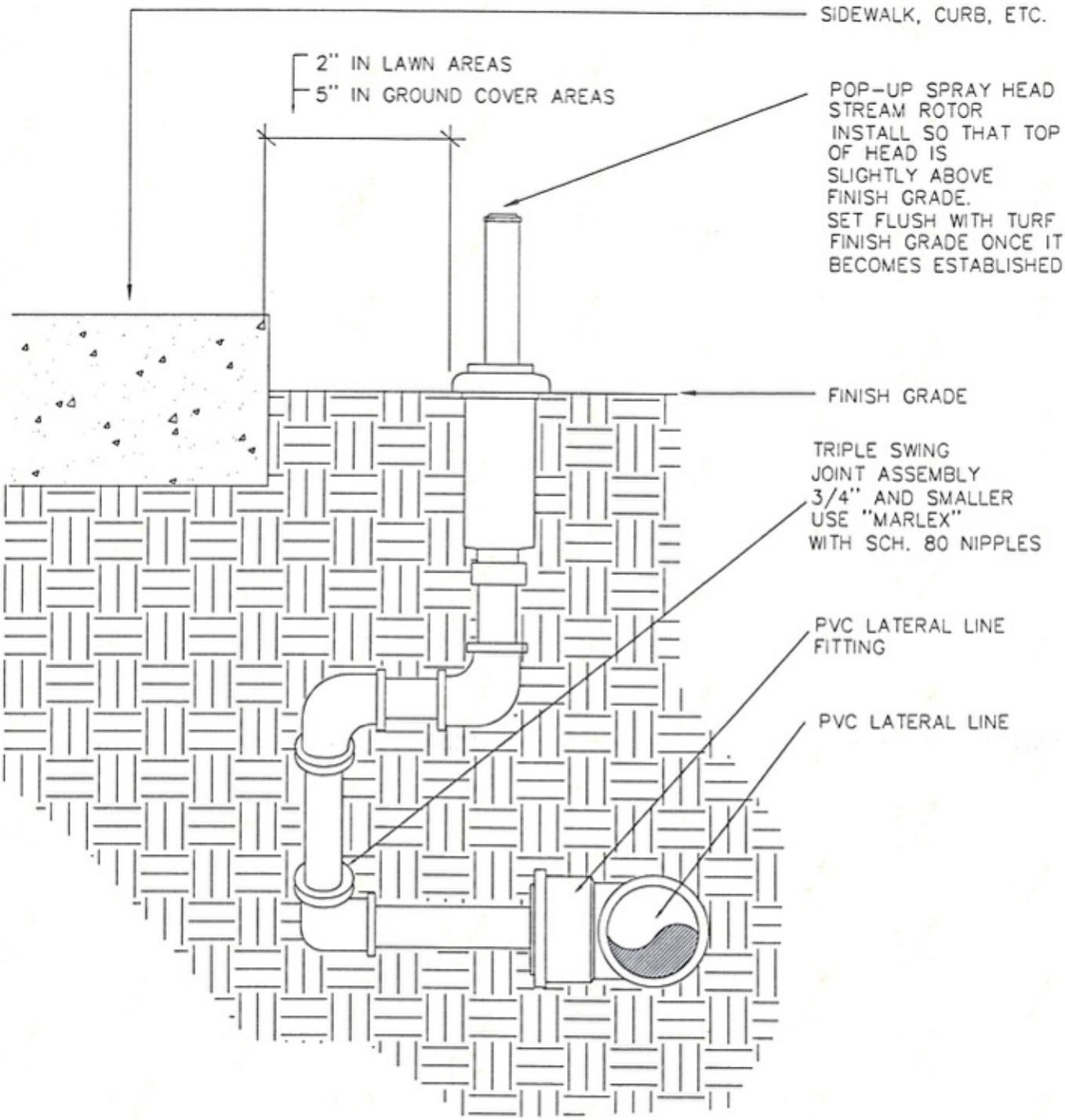

NOTES:

"FUNNY PIPE" SWING JOINT TUBING MAY BE USED ON THE SWING JOINT ASSEMBLY FOR POP UP SPRAY HEADS ONLY (NOT ROTORS) WITH A MAXIMUM LENGTH OF 18". MINIMUM WALL THICKNESS SHALL BE 3MM.

TOWN OF JACKSON WYOMING	*POP UP HEAD*	LS-104 DATE: *1/17/07*
		SCALE: *NTS*

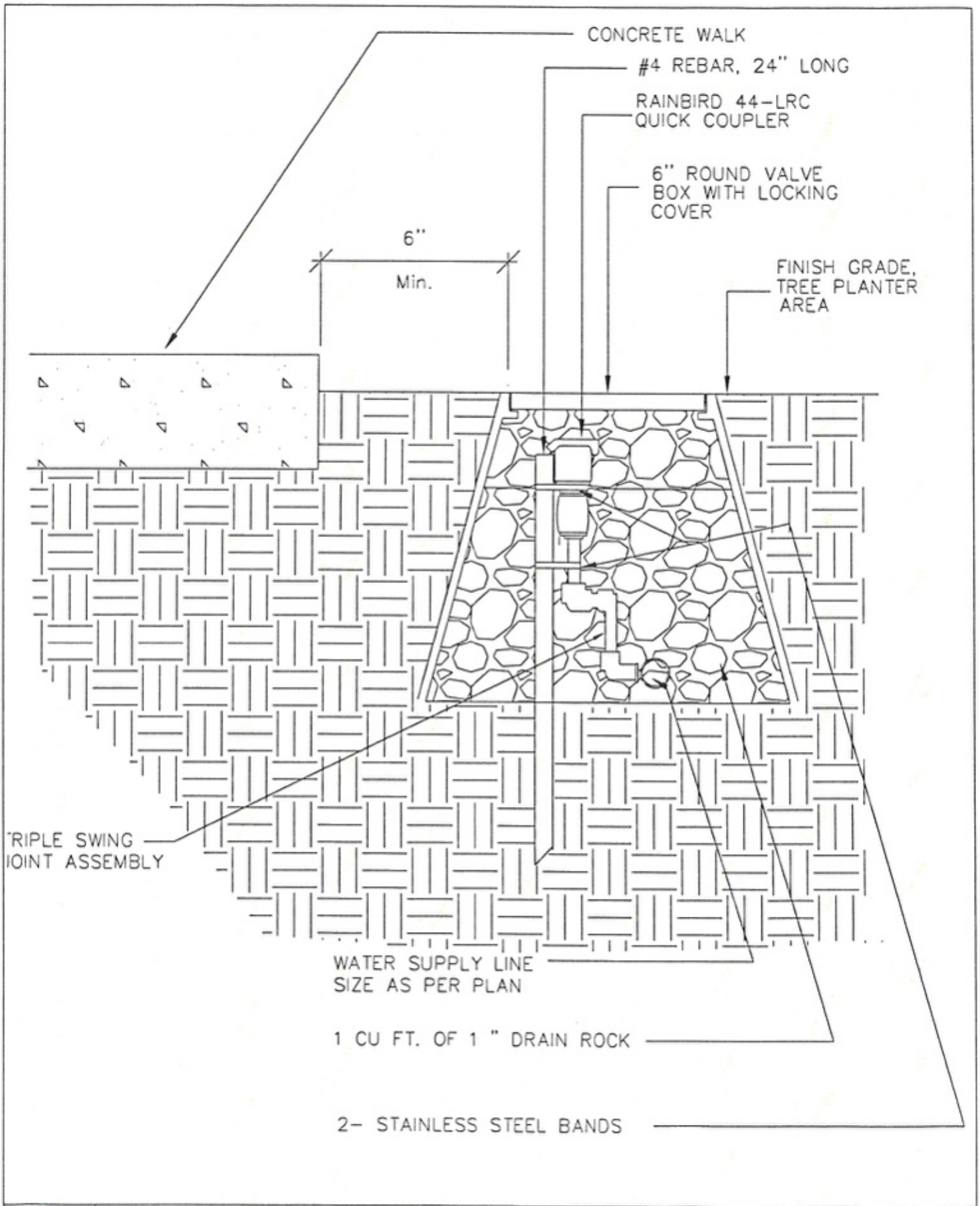

TOWN OF JACKSON WYOMING	*QUICK COUPLER*	LS-105 DATE: *1/17/07*
		SCALE: *NTS*